ASSOCIATION OF CONSULTING ENGINEERS NEW ZEALAND

ISO 9001 QUALITY ASSURED

THIS DRAWING AND DESIGN REMAINS THE PROPERTY OF, AND MAY NOT BE REPRODUCED OR ALTERED, WITHOUT THE WRITTEN PERMISSION OF HARRISON GRIERSON CONSULTANTS LIMITED. NO LIABILITY SHALL BE ACCEPTED FOR UNAUTHORISED USE OF THIS DRAWING.

NOTES:

1. REFER TO DWG A2213426-00-400 FOR STORMWATER AND GENERAL NOTES.
2. ALL THE STORMWATER MANAGEMENT DECICES SUCH AS TANKS AND FILTERS WILL BE SUBJECT TO FURTHER DESIGN CONSIDERATION PRIOR TO LODGING RC. WHAT IS SHOWN ON THESE PLANS IS INDICATIVE ONLY
3. THE FFLS ARE PRELIMINARY AND SHALL BE FINALISED ONCE THE OLFP ASSESSMENT IS DONE AT LATER STAGE.

LEGEND:

- SITE BOUNDARY
- PROPOSED PRIVATE STORMWATER NETWORK
- PROPOSED STORMWATER OUTLET
- PROPOSED WASTEWATER NETWORK
- PERMEABLE PAVING DRIVEWAY

AUCKLAND OFFICE
LEVEL 4, 96 ST GEORGES BAY ROAD
PARNELL AUCKLAND 1052
T +64 9 917 5000
W www.harrisongrierson.com

REF	REVISIONS	BY	DATE
B	FOR FAST-TRACK CONSENT	PZS	01.02.23
A	FOR FAST-TRACK CONSENT	KMS	27.01.23

PROJECT:
Metlifecare
99 TOTARA ROAD DEVELOPMENT

TITLE:
STORMWATER MANAGEMENT PLAN
SHEET 1 OF 2

ORIGINATOR: RZR	DATE: 01.2023	SIGNED:	PLOT BY: OLZ
DRAWN: OLZ	DATE: 01.2023	SIGNED:	PLOT DATE: 02.02.23
CHECKED: RZR	DATE: 27.01.23	SIGNED:	SURVEY BY:
APPROVED: SXS	DATE: 27.01.23	SIGNED:	SURVEY DATE:

ISSUE STATUS: FOR FAST-TRACK CONSENT STAGE 1

PROJECT No: A2213426-00
SCALES: 1:500 - A1, 1:1000 - A3
A1

DRAWING No: A2213426-00-461
REV B

REFER TO APPROVED MASTER DRAWINGS FOR ORIGINAL SIGNATURES File: DATA\LOCAL\AUTODESK\C3D 2022\ENU\TEMPLATE N:\1050\A2213426.00_A TOTARA ROAD\CAD\CAD - SHEETS\A2213426-00 - 460 - SMP OVERALL LAYOUT.DWG

ASSOCIATION OF CONSULTING ENGINEERS NEW ZEALAND

ISO 9001 QUALITY ASSURED

THIS DRAWING AND DESIGN REMAINS THE PROPERTY OF, AND MAY NOT BE REPRODUCED OR ALTERED, WITHOUT THE WRITTEN PERMISSION OF HARRISON GRIERSON CONSULTANTS LIMITED. NO LIABILITY SHALL BE ACCEPTED FOR UNAUTHORISED USE OF THIS DRAWING.

NOTES:

1. REFER TO DWG A2213426-00-400 FOR STORMWATER AND GENERAL NOTES.
2. ALL THE STORMWATER MANAGEMENT DECICES SUCH AS TANKS AND FILTERS WILL BE SUBJECT TO FURTHER DESIGN CONSIDERATION PRIOR TO LODGING RC. WHAT IS SHOWN ON THESE PLANS IS INDICATIVE ONLY
3. THE FFLS ARE PRELIMINARY AND SHALL BE FINALISED ONCE THE OLFP ASSESSMENT IS DONE AT LATER STAGE.

LEGEND:

- SITE BOUNDARY
- PROPOSED PRIVATE STORMWATER NETWORK
- PROPOSED STORMWATER OUTLET
- PROPOSED WASTEWATER NETWORK
- PERMEABLE PAVING DRIVEWAY

HG
AUCKLAND OFFICE
LEVEL 4, 96 ST GEORGES BAY ROAD
PARNELL AUCKLAND 1052
T +64 9 917 5000
W www.harrisongrierson.com

REF	REVISIONS	BY	DATE
B	FOR FAST-TRACK CONSENT	PZS	01.02.23
A	FOR FAST-TRACK CONSENT	KMS	27.01.23

PROJECT:
Metlifecare
99 TOTARA ROAD DEVELOPMENT

TITLE:
STORMWATER MANAGEMENT PLAN
SHEET 2 OF 2

ORIGINATOR: RZR	DATE: 01.2023	SIGNED:	PLOT BY: OLZ
DRAWN: OLZ	DATE: 01.2023	SIGNED:	PLOT DATE: 02.02.23
CHECKED: RZR	DATE: 27.01.23	SIGNED:	SURVEY BY:
APPROVED: SXS	DATE: 27.01.23	SIGNED:	SURVEY DATE:

ISSUE STATUS:
FOR FAST-TRACK CONSENT STAGE 1

PROJECT No:	SCALES:	
A2213426-00	1:500 - A1 1:1000 - A3	A1

DRAWING No: A2213426-00-462
REV B

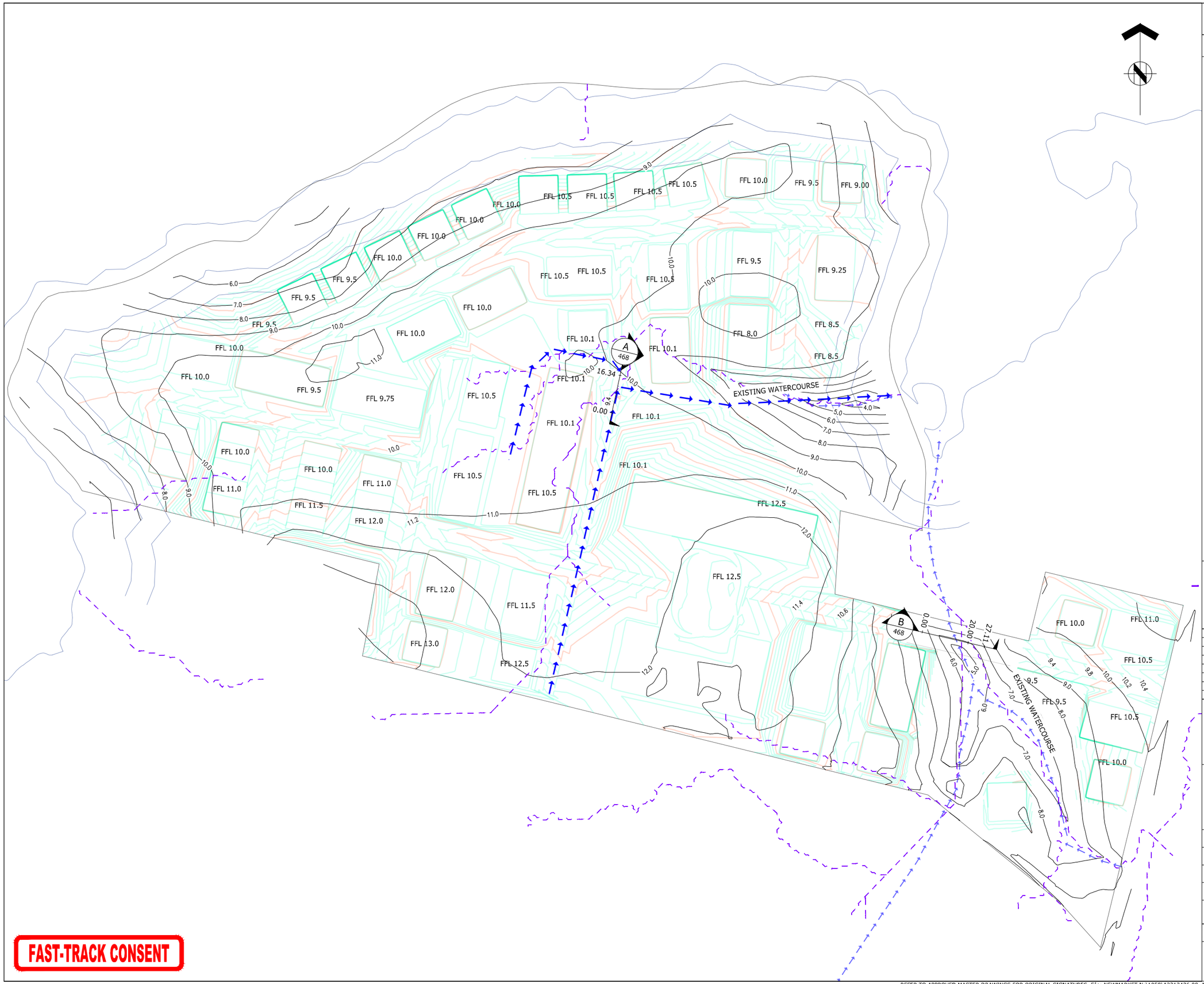

FAST-TRACK CONSENT

ASSOCIATION OF CONSULTING ENGINEERS NEW ZEALAND

ISO 9001 QUALITY ASSURED

THIS DRAWING AND DESIGN REMAINS THE PROPERTY OF, AND MAY NOT BE REPRODUCED OR ALTERED, WITHOUT THE WRITTEN PERMISSION OF HARRISON GRIERSON CONSULTANTS LIMITED. NO LIABILITY SHALL BE ACCEPTED FOR UNAUTHORISED USE OF THIS DRAWING.

NOTES:

1. REFER TO FLOWPATH CALCULATIONS AND HYRDAFLOW EXPRESS REPORTS FOR DETAILS ON EXTENT OF FLOWPATHS WITHIN ROADS.
2. ALL FLOWPATHS ARE WITHIN THE LEGAL ROAD WIDTH.
3. ALL EXISTING OVERLAND FLOW PATHS LOCATION AND VOLUMES HAVE BEEN OBTAINED FROM AUCKLAND COUNCIL GIS MAP DATA

LEGEND:

- SITE BOUNDARY
- EXISTING SURFACE CONTOURS SHOWN AT 1.0m INVERVALS
- PROPOSED CONTOURS SHOWN AT 0.2m INVERVALS
- PROPOSED 1% AEP OVERLAND FLOW PATH
- EXISTING OVERLAND FLOW PATH
- EXISTING WATER COURSE

AUCKLAND OFFICE
LEVEL 4, 96 ST GEORGES BAY ROAD
PARNELL AUCKLAND 1052
T +64 9 917 5000
W www.harrisongrierson.com

REF	REVISIONS	BY	DATE
B	FOR FAST-TRACK CONSENT	PZS	01.02.23
A	FOR FAST-TRACK CONSENT	KMS	27.01.23

PROJECT:

Metlifecare

99 TOTARA ROAD DEVELOPMENT

TITLE:

100 YEAR OVERLAND FLOWPATH
OVERALL LAYOUT PLAN

ORIGINATOR: RZR	DATE: 01.2023	SIGNED:	PLOT BY: PZS
DRAWN: OLZ	DATE: 01.2023	SIGNED:	PLOT DATE: 01.02.23
CHECKED: RZR	DATE: 27.01.23	SIGNED:	SURVEY BY:
APPROVED: SXS	DATE: 27.01.23	SIGNED:	SURVEY DATE:

ISSUE STATUS: FOR FAST-TRACK CONSENT STAGE 1

PROJECT No: A2213426-00

SCALES: 1:750- A1, 1:1500 - A3

A1

DRAWING No: A2213426-00-465

REV B

REFER TO APPROVED MASTER DRAWINGS FOR ORIGINAL SIGNATURES File: NEWMARKET N:\1050\A2213426.00_A TOTARA ROAD\CAD\CAD - SHEETS\A2213426-00 - 465 - 100 YEAR OLFP.DWG

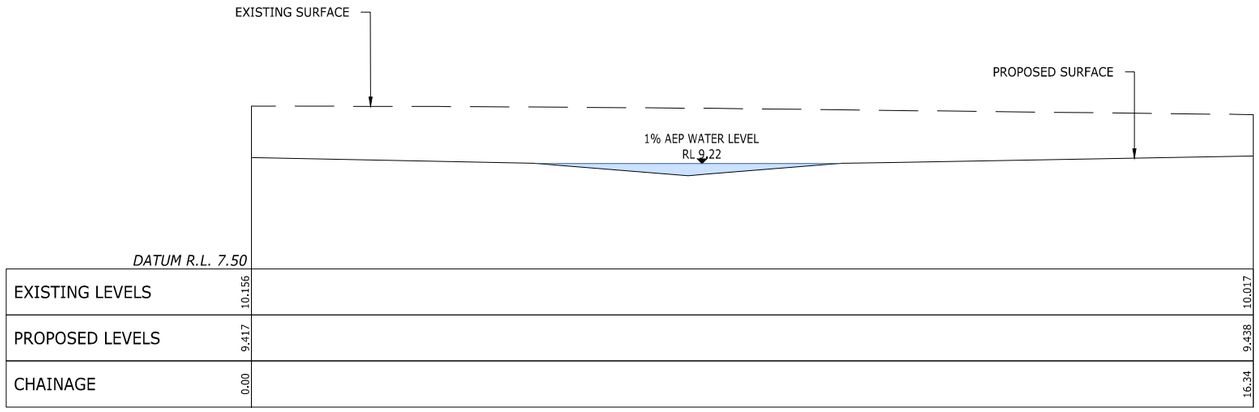

A-A
LONGSECTION BETWEEN 0.00 AND 16.34

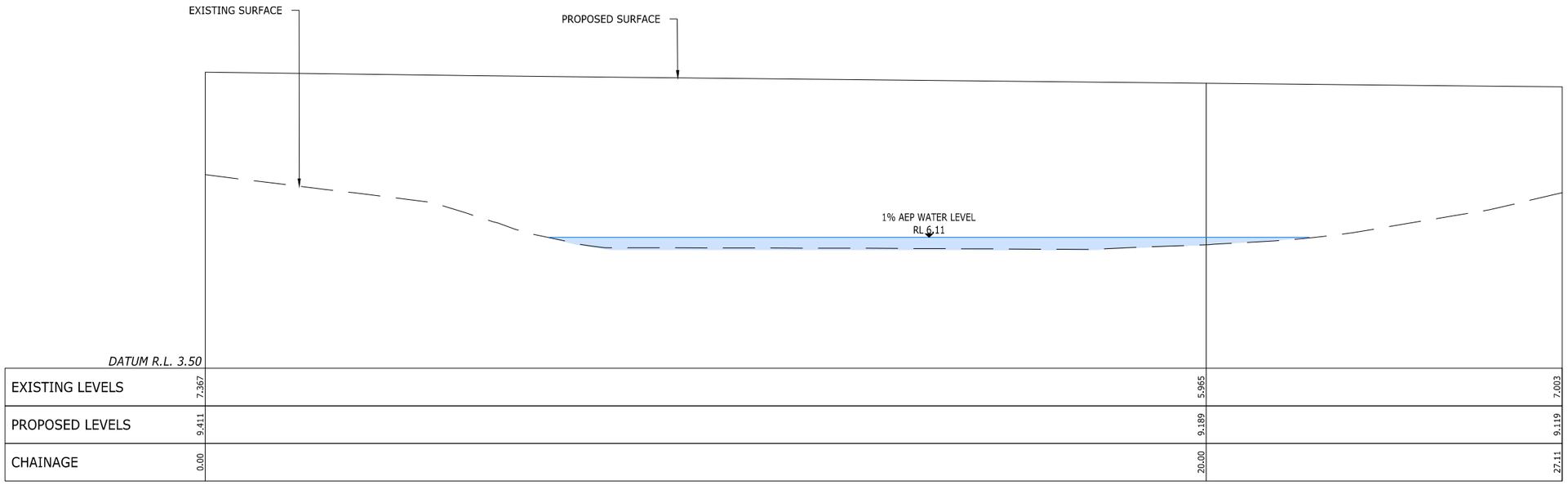

B-B
LONGSECTION BETWEEN 0.00 AND 27.11

FAST-TRACK CONSENT

ASSOCIATION OF CONSULTING ENGINEERS NEW ZEALAND

ISO 9001 QUALITY ASSURED

THIS DRAWING AND DESIGN REMAINS THE PROPERTY OF, AND MAY NOT BE REPRODUCED OR ALTERED, WITHOUT THE WRITTEN PERMISSION OF HARRISON GRIERSON CONSULTANTS LIMITED. NO LIABILITY SHALL BE ACCEPTED FOR UNAUTHORISED USE OF THIS DRAWING.

AUCKLAND OFFICE
LEVEL 4, 96 ST GEORGES BAY ROAD
PARNELL AUCKLAND 1052
T +64 9 917 5000
W www.harrisongrierson.com

REF	REVISIONS	BY	DATE
A	FOR FAST-TRACK CONSENT STAGE 1	KMS	27.01.23

PROJECT:
Metlifecare
99 TOTARA ROAD DEVELOPMENT

TITLE:
100 YEAR OVERLAND FLOW PATH
CROSS SECTION POST DEVELOPMENT

ORIGINATOR: RZR	DATE: 01.2023	SIGNED:	PLOT BY: OLZ
DRAWN: OLZ	DATE: 01.2023	SIGNED:	PLOT DATE: 26.01.23
CHECKED: RZR	DATE: 01.2023	SIGNED:	SURVEY BY:
APPROVED: SXS	DATE: 01.2023	SIGNED:	SURVEY DATE:

ISSUE STATUS:
FOR FAST-TRACK CONSENT STAGE 1

PROJECT No: A2213426-00
SCALES: 1:50 A1, 1:100 - A3
A1

DRAWING No: A2213426-00-468
REV A

ASSOCIATION OF CONSULTING ENGINEERS NEW ZEALAND
ISO 9001 QUALITY ASSURED
THIS DRAWING AND DESIGN REMAINS THE PROPERTY OF, AND MAY NOT BE REPRODUCED OR ALTERED, WITHOUT THE WRITTEN PERMISSION OF HARRISON GRIERSON CONSULTANTS LIMITED. NO LIABILITY SHALL BE ACCEPTED FOR UNAUTHORISED USE OF THIS DRAWING.

NOTES:

1. ALL DIMENSIONS ARE IN MILLIMETRES.
2. EMBEDMENT, TRENCH FILL AND COMPACTION SHALL MEET THE REQUIREMENT OF DESIGN DRAWINGS OR SPECIFICATIONS.
3. SIDES OF EXCAVATION SHALL BE KEPT VERTICAL TO AT LEAST 150mm ABOVE THE PIPE.

MATERIAL	ZONE
TO AUCKLAND TRANSPORT REQUIREMENTS	SURFACE COURSE
TO MATCH EXISTING ROAD BASE OR TO AUCKLAND TRANSPORT REQUIREMENTS	ROAD BASE
TRENCH FILL MATERIALS IN ACCORDANCE WITH SW02 AND SW03, COMPACTED IN LAYERS OF NOT MORE THAN 300mm OR AS SPECIFIED	TRENCH FILL (AS SPECIFIED IN DESIGN DRAWINGS)
EMBEDMENT MATERIAL IN ACCORDANCE WITH SW02 AND SW03	EMBEDMENT
	OVER-EXCAVATION

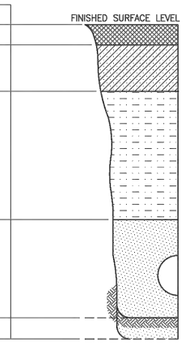

VEHICULAR LOADING (CARRIAGEWAY)

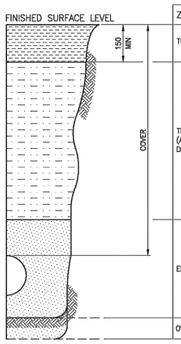

ZONE	MATERIAL
TOPSOIL OR PAVEMENT	ORIGINAL OR IMPORTED MATERIAL TO MATCH EXISTING
TRENCH FILL (AS SPECIFIED IN DESIGN DRAWINGS)	INORGANIC FILL MATERIAL PLACED IN LAYERS NOT MORE THAN 300mm OR AS SPECIFIED
EMBEDMENT	EMBEDMENT MATERIAL IN ACCORDANCE WITH SW02 AND SW03
OVER-EXCAVATION	

NO VEHICULAR LOADING (NON CARRIAGEWAY)
INCLUDES LOCATIONS WHERE OCCASIONAL VEHICLE LOADING OCCURS

STORMWATER CODE OF PRACTICE
STANDARD DETAILS
REVISION: 2
REV DATE: 1 NOVEMBER 2015
CAD FILENAME: AC-STD-SW01.DWG

AUCKLAND COUNCIL
EMBEDMENT & TRENCHFILL
TYPICAL ARRANGEMENT

ENVIRONMENTAL-SW | ORIGINAL SCALE A3 SCALE: N.T.S. | DRAWING SET SWCoP | SHEET 1 OF 1 | DRAWING No. SW01 | REV 2

NOTES:

1. THIS DRAWING SHALL BE READ IN CONJUNCTION WITH SW01.
2. CONCRETE PIPE CLASS SHALL BE DESIGNED IN ACCORDANCE WITH AS/NZS 3725: 2007, USING H2 BEDDING, TO CONSTRUCTION OR FINAL CONDITION LOADINGS, WHICHEVER IS GREATER.
3. PLACEMENT OF EMBEDMENT, TRENCHFILL, & COMPACTION SHALL MEET THE REQUIREMENTS OF DRAWINGS AND SPECIFICATIONS.
4. EXCAVATE OR COMPACT TRENCH FLOOR TO PROVIDE A FLAT FIRM BASE TO SUPPORT BEDDING MATERIAL AND MINIMISE PIPELINE SETTLEMENT.
   REPLACE EXCAVATED MATERIAL WITH SUITABLE GRANULAR MATERIAL FOR BEDDING.
5. ENSURE BEDDING IS DEEP ENOUGH THAT PIPE JOINT PROJECTIONS (SOCKETS) DO NOT TOUCH TRENCH FLOOR (SEE DETAIL BELOW).
6. OVERLAY ZONE TO BE GAP65. OTHER INORGANIC FILL MATERIAL MAY BE SPECIFIED FOR NON-CARRIAGEWAY AREAS.
7. MATERIAL SHALL BE COMPACTED AS NECESSARY TO PREVENT EXCESSIVE SETTLEMENT IN THE GROUND SURFACE LEVEL OVER THE INSTALLED PIPE.
8. WHERE REQUIRED BY SITE CONDITIONS SPECIFIC DESIGN OF PIPE EMBEDMENT MAY BE REQUIRED. THIS SHOULD BE UNDERTAKEN IN ACCORDANCE WITH AS/NZS 3725: 2007 TO THE APPROVAL OF AUCKLAND COUNCIL.
9. EMBEDMENT FOR 'RIGID PIPES' OTHER THAN CONCRETE IS SUBJECT TO SPECIFIC DESIGN AND APPROVAL.

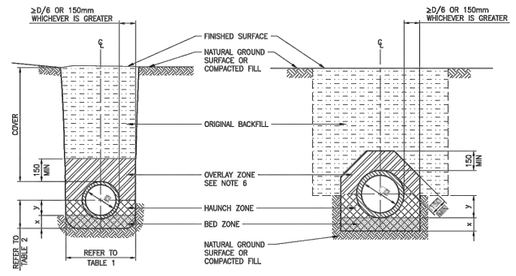

TRENCH CONDITION

EMBANKMENT CONDITION

H2 TYPE BEDDING – CONCRETE PIPES

TABLE 1

MAXIMUM PERMISSIBLE TRENCH WIDTHS (IF TRENCH WIDER, USE EMBANKMENT CONDITION)															
NORMAL INTERNAL PIPE DIAMETER (mm)	150	225	300	375	450	525	600	675	750	825	900	975	1050	1200	>1200
MAXIMUM TRENCH WIDTH (mm)	600	600	700	800	900	1000	1100	1200	1300	1400	1500	1500	1600	1800	OD+700

TABLE 2

H2 SUPPORT TYPE	MINIMUM DEPTH (mm)	
	x BED ZONE (mm)	y HAUNCH ZONE (mm)
	100 IF D ≤ 1500 150 IF D > 1500	0.3D

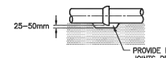

PIPE JOINT BEDDING POCKETS
FOR JOINT PROJECTIONS

STORMWATER CODE OF PRACTICE
STANDARD DETAILS
REVISION: 2
REV DATE: 1 NOVEMBER 2015
CAD FILENAME: AC-STD-SW03.DWG

AUCKLAND COUNCIL
PIPE EMBEDMENTS
STANDARD EMBEDMENT FOR CONCRETE PIPES

ENVIRONMENTAL-SW | ORIGINAL SCALE A3 SCALE: N.T.S. | DRAWING SET SWCoP | SHEET 1 OF 1 | DRAWING No. SW03 | REV 2

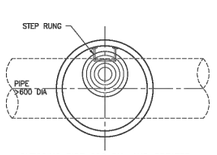

OUTGOING PIPE 600 DIA. AND GREATER

MANHOLE COVER AND RUNG ORIENTATION PLAN

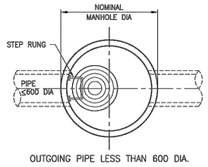

OUTGOING PIPE LESS THAN 600 DIA.

MANHOLE COVER AND RUNG ORIENTATION PLAN

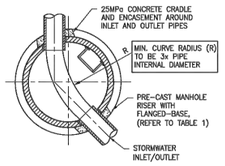

MANHOLE BASE & BENCHING PLAN

NOTES:

1. SAFE LANDING IS REQUIRED ON BENCHING AT BASE OF RUNGS.
2. ACCESS TO THE MANHOLE SHALL BE CLEAR OF ANY INCOMING PIPES.
3. SEE SECTION 4.3.10.9 OF THE SWCoP FOR 'MANHOLE COVER REQUIREMENTS'.
4. FOR PIPES <450 DIA, ALL PRE-CAST MANHOLE RISERS SHALL BE 1050mm DIA MAXIMUM. IF DEFLECTION ANGLE IS >90° THEN SPECIFIC DESIGN OF THE RISERS IS REQUIRED.
5. FOR PIPE DIAMETERS ≤600mm, ONE FLEXIBLE JOINT IS REQUIRED WITHIN 600mm OF THE RISER WALL. PIPE DIAMETERS GREATER THAN 600mm MAY NOT REQUIRE A FLEXIBLE JOINT.
6. MANHOLES SHALL BE DESIGNED TO USE THE MINIMUM NUMBER OF RISERS AND THE MINIMUM RISER HEIGHT SHALL BE 300mm. NO RISERS SHALL BE CUT DOWN TO HEIGHT.
7. FOR OUTLET PIPES WITH DIAMETERS GREATER THAN 600mm, REFER TO DRAWING SW09 FOR 'RECESSED RUNGS'.
8. WHERE HALF-ROUND CHANNELS ARE NOT AVAILABLE, THE CHANNEL SHALL BE FORMED WITH 25MPa CONCRETE, VIBRATED AND FINISHED SMOOTH. PLASTERING IS NOT PERMITTED.
9. ALL MANHOLE OPENINGS SHALL BE CUT WITH CONCRETE SAW. SLEDGE HAMMERS SHALL NOT BE USED.
10. FOR CONNECTIONS TO MANHOLES REFER TO SECTION 4.3.10.7 OF THE SWCoP.
11. MANHOLES WITH DEPTH TO INVERT LESS THAN 1.5m SHALL HAVE A CENTRALLY LOCATED COVER.
12. THE INSIDE OF THE MANHOLE THROAT SHALL BE PAINTED BLUE. RAISED THROATS ARE PERMITTED, BUT ARE SUBJECT TO SPECIFIC DESIGN.
13. ALL JOINTS BETWEEN RISERS SHALL BE EPOXIED. BUTYL MASTIC MAY BE USED IF APPROVED BY AUCKLAND COUNCIL.
14. WHERE A MANHOLE RISER IS GREATER THAN 2.4m IN HEIGHT ABOVE THE BENCHING, A REDUCER SLAB AND 1050mm RISER MAY BE USED FROM THAT POINT. SPECIFIC DESIGN IS REQUIRED.
15. CONCRETE MANHOLE LIDS SHALL BE FIXED DOWN USING CLAMPS. NO EPOXY OR MASTIC SEAL SHALL BE USED ON LIDS.
16. COVER/FRAME SHALL BE BOLTED TO LID SLAB WITH SS DYNABOLTS AND SEALED WITH EPOXY MORTAR.
17. MANHOLE CONCRETE LIDS AND CAST IRON COVERS SHALL BE DESIGNED IN ACCORDANCE WITH SECTIONS 4.3.10.3 AND 4.3.10.9 OF THE SWCoP.

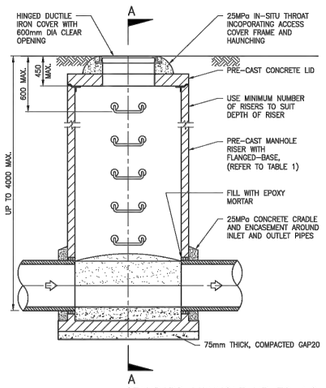

STANDARD MANHOLE UP TO 4.0m DEPTH TO INVERT – ELEVATION

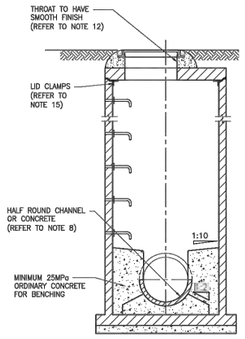

SECTION AA

TABLE 1

MINIMUM MANHOLE RISER DIAMETER						
PIPE DIA	DEFLECTION					
	0°	15°	30°	45°	60°	75°
450	1050	1050	1050	1200	1500	1800
525	1050	1050	1200	1200	1500	1800
600	1200	1200	1500	1500	1800	1800
750	1500	1500	1800	1800	SD*	SD*
825	1800	1800	1800	SD*	SD*	SD*
900	1800	1800	SD*	SD*	SD*	SD*
1050	SD*	SD*	SD*	SD*	SD*	SD*

SD*: SPECIFIC DESIGN.
>75° DEFLECTION SHALL REQUIRE 'SPECIFIC DESIGN'.
FOR MANHOLE RISERS FOR ANY DIAMETER OF PIPE >375mm

STORMWATER CODE OF PRACTICE
STANDARD DETAILS
REVISION: 2
REV DATE: 1 NOVEMBER 2015
CAD FILENAME: AC-STD-SW05.DWG

AUCKLAND COUNCIL
STANDARD STORMWATER MANHOLE
SUITABLE FOR UP TO 4.0m DEPTH TO INVERT

ENVIRONMENTAL-SW | ORIGINAL SCALE A3 SCALE: N.T.S. | DRAWING SET SWCoP | SHEET 1 OF 1 | DRAWING No. SW05 | REV 2

NOTES:

1. RECESSED RUNGS SHALL BE USED FOR PIPE DIAMETERS > 600mm.
2. RECESSED RUNGS SHALL BE LOCATED ON INSIDE CURVE OF BENCHING AND SHALL ALIGN WITH MANHOLE ACCESS RUNGS.
3. ALL STEELWORK SHALL BE 'HOT DIPPED GALVANISED' AFTER FABRICATION HAS BEEN COMPLETED, WITH A MINIMUM AVERAGE COATING WEIGHT OF ZINC=610g/sqm TO AS/NZS 4680-1999.
4. BELOW RL 4.00m OR IN SEVERE EXPOSURE CONDITIONS, PE COATED HOT DIPPED GALVANISED STEEL OR PE COATED 316 STAINLESS STEEL RUNGS SHALL BE USED.
5. STAINLESS STEEL RUNGS MAY BE 16mm DIA SUBJECT TO AUCKLAND COUNCIL APPROVAL.
6. OTHER RUNG SYSTEMS MAY BE UTILISED SUBJECT TO AUCKLAND COUNCIL APPROVAL.

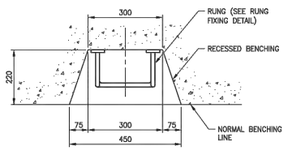

PLAN – RECESSED RUNG DETAIL

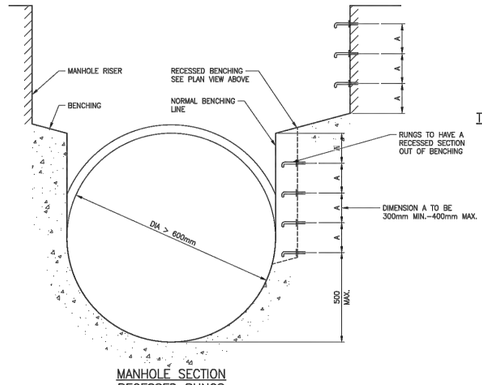

MANHOLE SECTION
RECESSED RUNGS

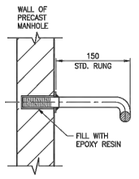

TYPICAL SECTION RUNG CONNECTION BY EPOXY RESIN
(FOR RECESSED STEPS AND RETRO ONLY)

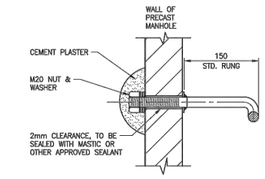

TYPICAL SECTION RUNG CONNECTION BY NUT

RUNG CONNECTIONS

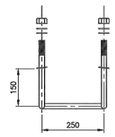

PLAN

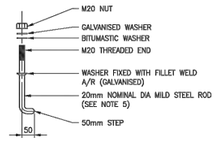

SIDE ELEVATION

TYPICAL RUNG ASSEMBLY

STORMWATER CODE OF PRACTICE
STANDARD DETAILS
REVISION: 2
REV DATE: 1 NOVEMBER 2015
CAD FILENAME: AC-STD-SW09.DWG

AUCKLAND COUNCIL
STORMWATER MANHOLE ACCESS
RECESSED RUNGS AND GENERAL ACCESS RUNGS DETAILS

ENVIRONMENTAL-SW | ORIGINAL SCALE A3 SCALE: N.T.S. | DRAWING SET SWCoP | SHEET 1 OF 1 | DRAWING No. SW09 | REV 2

FAST-TRACK CONSENT

AUCKLAND OFFICE
LEVEL 4, 96 ST GEORGES BAY ROAD
PARNELL AUCKLAND 1052
T +64 9 917 5000
W www.harrisongrierson.com

REF	REVISIONS	BY	DATE
B	FOR FAST-TRACK CONSENT STAGE 1	OLZ	01.02.23
A	FOR FAST-TRACK CONSENT STAGE 1	OLZ	27.01.23

PROJECT:
Metlifecare
99 TOTARA ROAD DEVELOPMENT

TITLE:
STORMWATER STANDARD DETAILS
SHEET 1 OF 4

ORIGINATOR: RZR	DATE: 01.2023	SIGNED:	PLOT BY: OLZ
DRAWN: OLZ	DATE: 01.2023	SIGNED:	PLOT DATE: 02.02.23
CHECKED: RZR	DATE: 27.01.23	SIGNED:	SURVEY BY:
APPROVED: SXS	DATE: 27.01.23	SIGNED:	SURVEY DATE:

ISSUE STATUS:
FOR FAST-TRACK CONSENT STAGE 1

PROJECT No: A2213426-00 | SCALES: N.T.S | A1

DRAWING No: A2213426-00-490 | REV B

ASSOCIATION OF CONSULTING ENGINEERS NEW ZEALAND
ISO 9001 QUALITY ASSURED

THIS DRAWING AND DESIGN REMAINS THE PROPERTY OF, AND MAY NOT BE REPRODUCED OR ALTERED, WITHOUT THE WRITTEN PERMISSION OF HARRISON GRIERSON CONSULTANTS LIMITED. NO LIABILITY SHALL BE ACCEPTED FOR UNAUTHORISED USE OF THIS DRAWING.

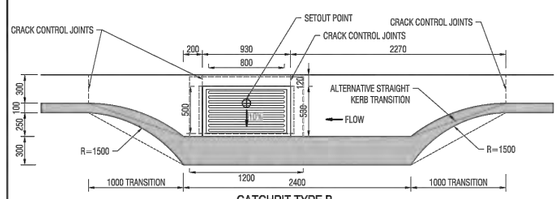

CATCHPIT TYPE B
SCALE: NTS

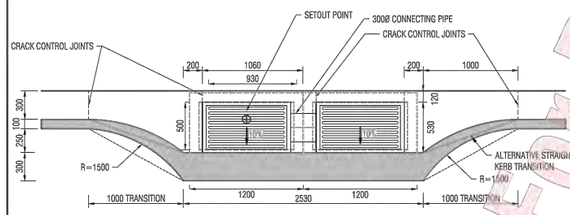

DOUBLE CATCHPIT
SCALE: NTS

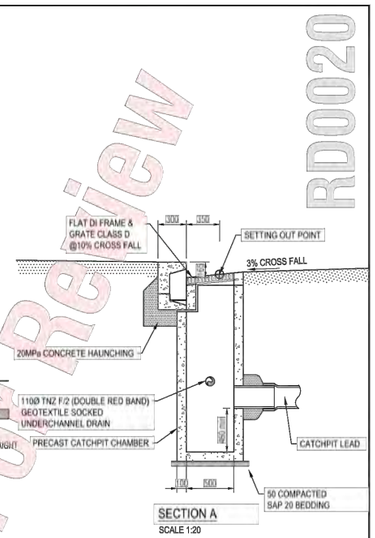

SECTION A
SCALE 1:20

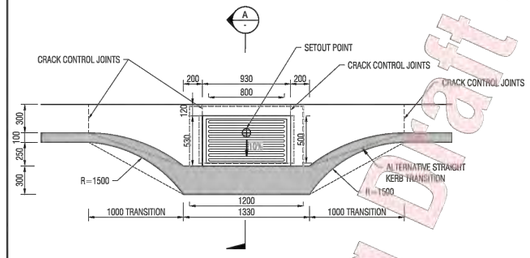

CATCHPIT TYPE A
SCALE: NTS

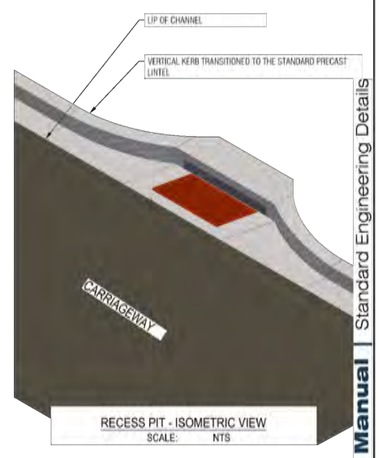

RECESS PIT - ISOMETRIC VIEW
SCALE: NTS

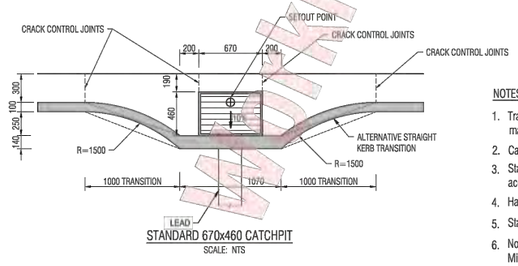

STANDARD 670x460 CATCHPIT
SCALE: NTS

NOTES:

1. Transition kerb to be precast, slip - formed to radius or with in situ concrete element to match to adjoining kerb type
2. Catchpit to be setout by kerbs stringline on-site to ensure correct location
3. Standard 670x460 dished grate is not cycle-friendly. Do not use where cycle access permitted.
4. Half syphon to be used in combined catchment areas only.
5. Standard 670x460 catchpit to be 1.4m deep.
6. Nominal Dimensions only. Refer to supplier's information for actual dimensions of catchpits. Minimum wall thickness 75 mm, Sump depth 450 min. Minimum depth to catchpit lead invert 725mm in grassed areas.
7. Increase class of pipe where minimum cover of 900mm cannot be achieved for Catchpit leads.

Transport Design Manual | Standard Engineering Details

RD0020

Working Draft - For Review

Review 1
DATE: February 14, 2020

TDM TECHNICAL STANDARDS
Semi-recessed catch pit

Date: Document in Review
SED No. RD0020
Version A

AUCKLAND OFFICE
LEVEL 4, 96 ST GEORGES BAY ROAD
PARNELL AUCKLAND 1052
T +64 9 917 5000
W www.harrisongrierson.com

REF	REVISIONS	BY	DATE
B	FOR FAST-TRACK CONSENT STAGE 1	OLZ	01.02.23
A	FOR FAST-TRACK CONSENT STAGE 1	OLZ	27.01.23

PROJECT:
Metlifecare
99 TOTARA ROAD DEVELOPMENT

TITLE:
STORMWATER STANDARD DETAILS
SHEET 2 OF 4

ORIGINATOR: RZR	DATE: 01.2023	SIGNED:	PLOT BY: OLZ
DRAWN: OLZ	DATE: 01.2023	SIGNED:	PLOT DATE: 02.02.23
CHECKED: RZR	DATE: 27.01.23	SIGNED:	SURVEY BY:
APPROVED: SXS	DATE: 27.01.23	SIGNED:	SURVEY DATE:

ISSUE STATUS:
FOR FAST-TRACK CONSENT STAGE 1

PROJECT No: A2213426-00
SCALES: N.T.S
A1

DRAWING No: A2213426-00-491
REV B

FAST-TRACK CONSENT

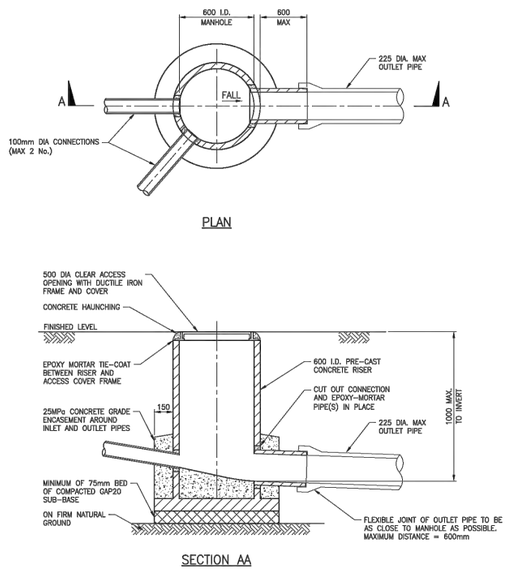

NOTES:

1. NON-ACCESS CHAMBER, SUITABLE FOR OUTLET INVERT DEPTH OF LESS THAN 1000mm.
2. MAXIMUM OUTLET PIPE DIAMETER SHALL BE 225mm.
3. MAXIMUM NUMBER OF CONNECTIONS SHALL BE TWO 100mm DIA INLET CONNECTIONS PER NON-ACCESS CHAMBER. ADDITIONAL CONNECTIONS MAY BE ALLOWED WITH APPROVAL FROM AUCKLAND COUNCIL.
4. BENCHING WITHIN NON-ACCESS CHAMBERS IS NOT MANDATORY.

STORMWATER CODE OF PRACTICE STANDARD DETAILS REVISION: 2 REV DATE: 1 NOVEMBER 2015 CAD FILENAME: AC-STD-SW06.DWG	AUCKLAND COUNCIL STORMWATER MANHOLES – NON-ACCESS CHAMBER TYPICAL DETAIL (OUTLET INVERT DEPTH LESS THAN 1000mm)	ENVIRONMENTAL-SW	ORIGINAL SCALE A3 SCALE: N.T.S. DRAWING SET SWCoP SHEET 1 OF 1 DRAWING No. SW06 REV 2

PLOT DATE: 13/8/2018 1:13 AM H:\ACADAD\Projects\AS\SW40 AC CoP 2015\04 Deliverables\Drawings\AC-STD-SW06.dwg

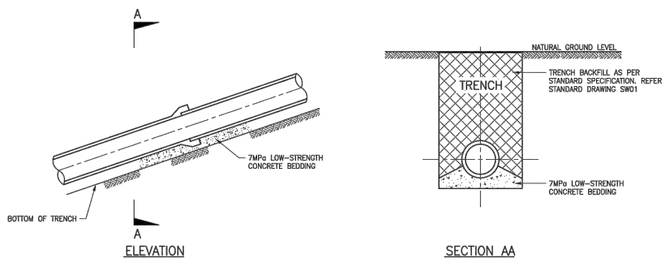

BEDDING FOR PIPES ON GRADIENTS BETWEEN 10% AND 20%

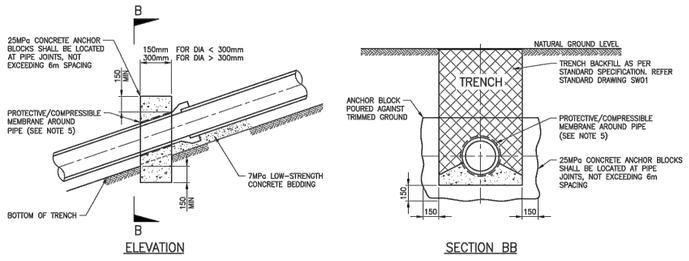

ANCHOR BLOCKS FOR PIPES ON GRADIENT > 20%

NOTES:

1. USE LOW-STRENGTH CONCRETE (7MPa) BEDDING FOR PIPES ON GRADIENTS BETWEEN 10% AND 20%.
2. USE ANCHOR BLOCKS FOR PIPES ON GRADIENTS STEEPER THAN 20% (1 IN 5).
3. SPECIFIC DESIGN AND SPACING MAY BE NEEDED FOR PIPES ON GRADIENTS >30% OR WHERE GROUNDWATER IS CONSIDERED SIGNIFICANT.
4. ANCHOR BLOCK TO BE CONSTRUCTED ON LOWER SIDE OF JOINT.
5. PIPE SHALL BE WRAPPED FOR LENGTH OF THE ANCHOR BLOCK AT THE CONCRETE INTERFACE. WRAPPING SHALL BE COMPRESSIBLE MATERIAL. (e.g. DENSO TAPE OR POLYETHYLENE FILM).
6. WHERE PIPES ARE EMBEDDED IN LOW-STRENGTH CONCRETE, A TRANSVERSE EXPANSION JOINT SHALL BE PROVIDED AT EACH JOINT.
7. FOR FLEXIBLE PIPELINES, UP TO 300mm DIA, ON GRADIENTS OF 10% AND GREATER, REQUIRED BENCHING DEPTHS WITHIN THE DOWNSTREAM MANHOLE CAN BE REDUCED, BY THE REDUCTION OF THE GRADIENT IMMEDIATELY OUTSIDE THE MANHOLE. THIS MAY BE ACHIEVED BY INSTALLING A MANUFACTURED, PRE-FORMED BEND WITH VERTICAL RADIUS MIN. 8x INSIDE PIPE DIAMETER.

STORMWATER CODE OF PRACTICE STANDARD DETAILS REVISION: 3 REV DATE: 6 JUNE 2018 CAD FILENAME: AC-STD-SW23.DWG	AUCKLAND COUNCIL STORMWATER LINES STEEP GRADIENTS AND ANCHOR BLOCKS	ENVIRONMENTAL-SW	ORIGINAL SCALE A3 SCALE: N.T.S. DRAWING SET SWCoP SHEET 1 OF 1 DRAWING No. SW23 REV 3

PLOT DATE: 13/6/2018 1:14 PM P:\AC_Everything Association\13 Projects\Code of Practice\CAD\AC-STD-SW23.dwg

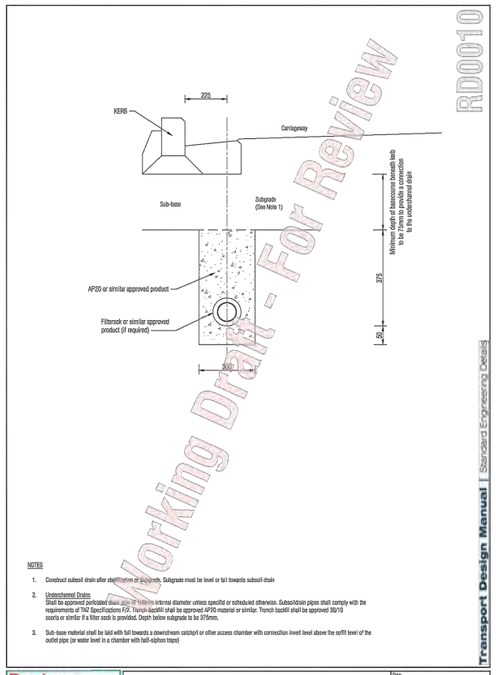

Review 1 (Draft - February 14 2020)	TDM TECHNICAL STANDARDS Subsoil drain	Status Document in Review STD No. RD0010	Version A

FAST-TRACK CONSENT

ASSOCIATION OF CONSULTING ENGINEERS NEW ZEALAND

ISO 9001 QUALITY ASSURED

THIS DRAWING AND DESIGN REMAINS THE PROPERTY OF, AND MAY NOT BE REPRODUCED OR ALTERED, WITHOUT THE WRITTEN PERMISSION OF HARRISON GRIERSON CONSULTANTS LIMITED. NO LIABILITY SHALL BE ACCEPTED FOR UNAUTHORISED USE OF THIS DRAWING.

AUCKLAND OFFICE
LEVEL 4, 96 ST GEORGES BAY ROAD
PARNELL AUCKLAND 1052
T +64 9 917 5000
W www.harrisongrierson.com

REF	REVISIONS	BY	DATE
B	FOR FAST-TRACK CONSENT STAGE 1	OLZ	01.02.23
A	FOR FAST-TRACK CONSENT STAGE 1	OLZ	27.01.23

PROJECT:
Metlifecare
99 TOTARA ROAD DEVELOPMENT

TITLE:
STORMWATER STANDARD DETAILS
SHEET 3 OF 4

ORIGINATOR: RZR	DATE: 01.2023	SIGNED:	PLOT BY: OLZ
DRAWN: OLZ	DATE: 01.2023	SIGNED:	PLOT DATE: 02.02.23
CHECKED: RZR	DATE: 27.01.23	SIGNED:	SURVEY BY:
APPROVED: SXS	DATE: 27.01.23	SIGNED:	SURVEY DATE:

ISSUE STATUS: FOR FAST-TRACK CONSENT STAGE 1

PROJECT No: A2213426-00 | SCALES: N.T.S | A1

DRAWING No: A2213426-00-492 | REV B

REFER TO APPROVED MASTER DRAWINGS FOR ORIGINAL SIGNATURES File: DATA\LOCAL\AUTODESK\C3D 2022\ENU\TEMPLATE N:\1050\A2213426.00_A TOTARA ROAD\CAD\CAD - SHEETS\A2213426-00 - 490 - DRAINAGE STANDARD DETAILS.DWG

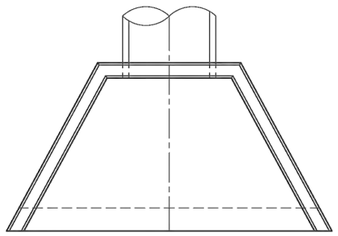

PLAN

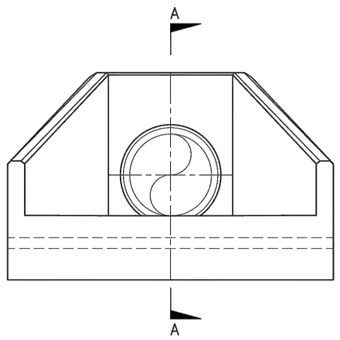

FRONT ELEVATION

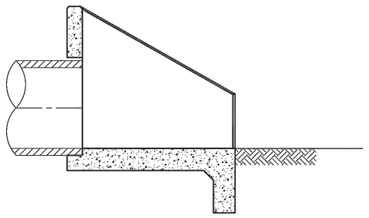

SECTION AA

NOTES:

1. THIS DRAWING IS INTENDED TO PROVIDE AN OVERVIEW OF A TYPICAL CONFIGURATION FOR INLET/OUTLET STRUCTURES. WHERE STANDARD PRE-CAST PRODUCTS ARE NOT SUITABLE, SPECIFIC DESIGN IS REQUIRED.
2. DESIGN OF PRE-CAST INLET/OUTLET STRUCTURES SHALL INCLUDE ASSESSMENT OF THE STRUCTURE LOCATION AND THE VISIBILITY OF THE STRUCTURE. IT MAY BE NECESSARY TO SPECIFICALLY DESIGN THE STRUCTURE AND USE BASALT ROCKS EMBEDDED IN CONCRETE OR APPROVED ALTERNATIVE IN HIGH VISIBILITY AREAS.
3. FOR OUTLET STRUCTURES, SPECIFIC DESIGN OF SCOUR PREVENTION AND ENERGY DISSIPATION WILL BE REQUIRED IN ACCORDANCE WITH AUCKLAND COUNCIL TECHNICAL REPORT TR2013/018. ENERGY DISSIPATORS MAY INCLUDE BAFFLES, ROCK RIP-RAP OR RENO MATTRESSES (OR GABIONS).
4. FOR INLET STRUCTURES, SPECIFIC DESIGN OF SCOUR PREVENTION MEASURES SHALL BE REQUIRED IN ACCORDANCE WITH AUCKLAND COUNCIL TECHNICAL REPORT TR2013/018.
5. ALL CONCRETE SHALL BE ORDINARY GRADE 40MPa.
6. THERE SHALL BE AT LEAST TWO BARS OF REINFORCING (WHETHER MESH OR MILD STEEL BARS), OVER THE TOP OF THE PIPE.
7. ALL REINFORCING BARS SHALL BE "GRADE 500E" AND MESH SHALL BE "GRADE 500L".
8. THE ENGINEER SHALL ENSURE THE STRUCTURE IS PLACED ON ADEQUATE FOUNDATION MATERIAL.
9. FENCING AROUND INLET/OUTLET STRUCTURES IS REQUIRED UNLESS IT CAN BE DEMONSTRATED THAT HUMAN ACCESS TO THE INLET/OUTLET STRUCTURE IS UNLIKELY AND/OR THE HEIGHT OF THE STRUCTURE IS LESS THAN 1.2m. FENCING SHALL BE IN ACCORDANCE WITH DRAWING SW20.
10. INLETS TO THE STORMWATER NETWORK SHALL BE FITTED WITH A SAFETY GRILLE. THE GRILLE SHALL BE SPECIFICALLY DESIGNED AND REQUIRES AUCKLAND COUNCIL APPROVAL. FOR CULVERT INLETS, A RISK ASSESSMENT SHOULD BE COMPLETED TO DECIDE WHETHER A SAFETY GRILLE IS REQUIRED. SEE SECTION 4.3.9.9 FOR FURTHER DETAILS.

STORMWATER CODE OF PRACTICE
STANDARD DETAILS

REVISION: 2
REV DATE: 1 NOVEMBER 2015
CAD FILENAME: AC-STD-SW19.DWG

AUCKLAND COUNCIL

STORMWATER INLET/OUTLET STRUCTURES

TYPICAL CONFIGURATION

ENVIRONMENTAL-SW

ORIGINAL SCALE A3
SCALE: N.T.S.
DRAWING SET: SWCoP
SHEET: 1 OF 1
DRAWING No.: SW19
REV: 2

PLOT DATE 12/8/2015 11:57 AM I:\AENWA\Projects\AE04840 AC CoP Ch11\04 Deliverables\Drawings\AC-STD-SW19.dwg

ASSOCIATION OF CONSULTING ENGINEERS NEW ZEALAND

ISO 9001 QUALITY ASSURED

THIS DRAWING AND DESIGN REMAINS THE PROPERTY OF, AND MAY NOT BE REPRODUCED OR ALTERED, WITHOUT THE WRITTEN PERMISSION OF HARRISON GRIERSON CONSULTANTS LIMITED. NO LIABILITY SHALL BE ACCEPTED FOR UNAUTHORISED USE OF THIS DRAWING.

AUCKLAND OFFICE
LEVEL 4, 96 ST GEORGES BAY ROAD
PARNELL AUCKLAND 1052
T +64 9 917 5000
W www.harrisongrierson.com

REF	REVISIONS	BY	DATE
B	FOR FAST-TRACK CONSENT STAGE 1	OLZ	01.02.23
A	FOR FAST-TRACK CONSENT STAGE 1	OLZ	27.01.23

PROJECT:
Metlifecare
99 TOTARA ROAD DEVELOPMENT

TITLE:
STORMWATER STANDARD DETAILS
SHEET 4 OF 4

ORIGINATOR: RZR	DATE: 01.2023	SIGNED:	PLOT BY: OLZ
DRAWN: OLZ	DATE: 01.2023	SIGNED:	PLOT DATE: 02.02.23
CHECKED: RZR	DATE: 27.01.23	SIGNED:	SURVEY BY:
APPROVED: SXS	DATE: 27.01.23	SIGNED:	SURVEY DATE:

ISSUE STATUS:
FOR FAST-TRACK CONSENT STAGE 1

PROJECT No: A2213426-00
SCALES: N.T.S
A1

DRAWING No: A2213426-00-493
REV B

FAST-TRACK CONSENT

ASSOCIATION OF CONSULTING ENGINEERS NEW ZEALAND
ISO 9001 QUALITY ASSURED
THIS DRAWING AND DESIGN REMAINS THE PROPERTY OF, AND MAY NOT BE REPRODUCED OR ALTERED, WITHOUT THE WRITTEN PERMISSION OF HARRISON GRIERSON CONSULTANTS LIMITED. NO LIABILITY SHALL BE ACCEPTED FOR UNAUTHORISED USE OF THIS DRAWING.

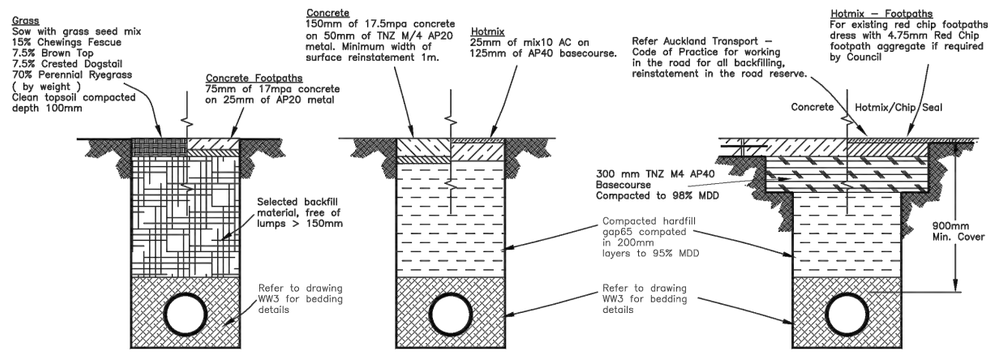

GRASS AREA & FOOTPATH (Not in Road reserve) REINSTATEMENT

DRIVEWAY REINSTATEMENT (Not in Road Reserve)

FOOTPATH/VEHICLE CROSSING, CARRIAGEWAY REINSTATEMENT

NOTES

1. All trench surface reinstatement within the road reserve shall comply with Auckland Transport requirements.
   The details shown are typical expectations for reinstatements.
2. Backfill shall be compacted in 200mm layers to obtain maximum density as described in Watercare's Construction Standards.
3. Where concrete or other stabilized layers exist in the roadway, the trench shall be reinstated with similar material or as directed by the roading engineer.

Watercare

COPYRIGHT – This drawing, the design concept, remain the exclusive property of Watercare Services Limited and may not be used without approval. Copyright reserved.

TYPICAL TRENCH REINSTATEMENT DETAILS FOR WASTEWATER

SCALE:	N.T.S.
ISSUE DATE:	06–03–2017
DWG No.	2010070.001C
REFERENCE No.	WW 2

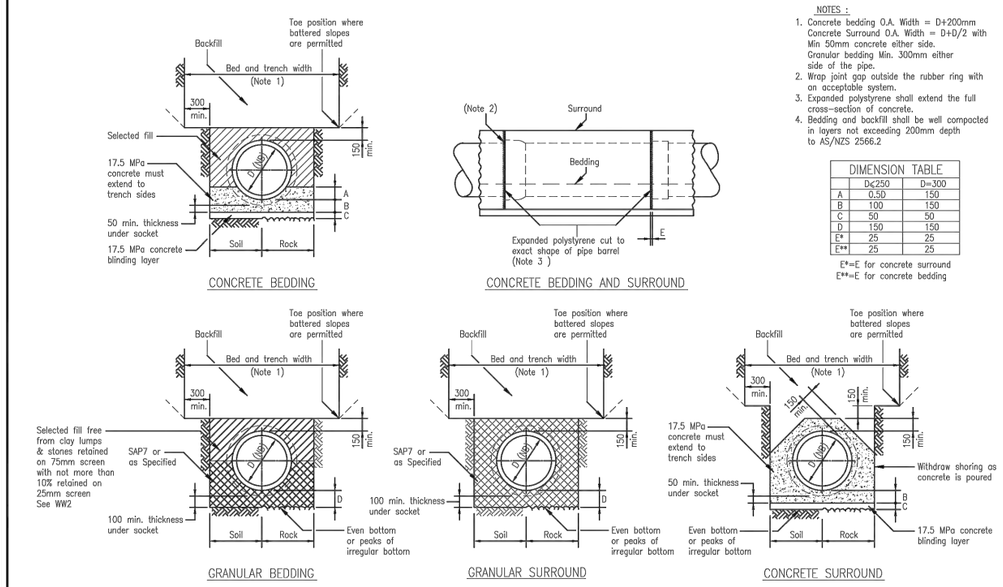

NOTES :

1. Concrete bedding O.A. Width = D+200mm
   Concrete Surround O.A. Width = D+D/2 with Min 50mm concrete either side.
   Granular bedding Min. 300mm either side of the pipe.
2. Wrap joint gap outside the rubber ring with an acceptable system.
3. Expanded polystyrene shall extend the full cross–section of concrete.
4. Bedding and backfill shall be well compacted in layers not exceeding 200mm depth to AS/NZS 2566.2

DIMENSION TABLE

	D≤250	D=300
A	0.50	150
B	100	150
C	50	50
D	150	150
E*	25	25
E**	25	25

E*=E for concrete surround
E**=E for concrete bedding

CONCRETE BEDDING

CONCRETE BEDDING AND SURROUND

GRANULAR BEDDING

GRANULAR SURROUND

CONCRETE SURROUND

Watercare

COPYRIGHT – This drawing, the design concept, remain the exclusive property of Watercare Services Limited and may not be used without approval. Copyright reserved.

BEDDING DETAILS

SCALE:	N.T.S.
ISSUE DATE:	23–01–2017
DWG No.	2010070.005C
REFERENCE No.	WW 3

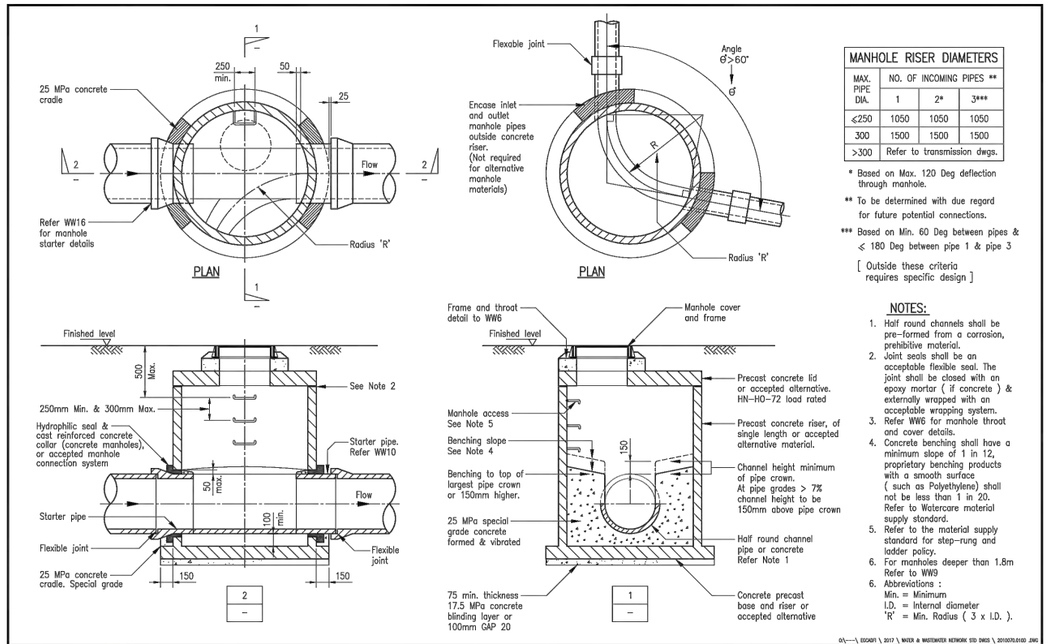

MANHOLE RISER DIAMETERS

MAX. PIPE DIA.	NO. OF INCOMING PIPES **		
	1	2*	3***
≤250	1050	1050	1050
300	1500	1500	1500
>300	Refer to transmission dwgs.		

* Based on Max. 120 Deg deflection through manhole.

** To be determined with due regard for future potential connections.

*** Based on Min. 60 Deg between pipes & ≤ 180 Deg between pipe 1 & pipe 3

[Outside these criteria requires specific design]

NOTES:

1. Half round channels shall be pre–formed from a corrosion, prehibitive material.
2. Joint seals shall be an acceptable flexible seal. The joint shall be closed with an epoxy mortar (if concrete) & externally wrapped with an acceptable wrapping system.
3. Refer WW6 for manhole throat and cover details.
4. Concrete benching shall have a minimum slope of 1 in 12, proprietary benching products with a smooth surface (such as Polyethylene) shall not be less than 1 in 20. Refer to Watercare material supply standard.
5. Refer to the material supply standard for step–rung and ladder policy.
6. For manholes deeper than 1.8m Refer to WW9
7. Abbreviations :
   Min. = Minimum
   I.D. = Internal diameter
   'R' = Min. Radius (3 x I.D.).

Watercare

COPYRIGHT – This drawing, the design concept, remain the exclusive property of Watercare Services Limited and may not be used without approval. Copyright reserved.

MANHOLE GENERAL DETAILS AND LAYOUT FOR MANHOLES UP TO 1.8m DEEP

SCALE:	N.T.S.
ISSUE DATE:	13–07–2018
DWG No.	2010070.010D
REFERENCE No.	WW 5

FAST-TRACK CONSENT

HG
AUCKLAND OFFICE
LEVEL 4, 96 ST GEORGES BAY ROAD
PARNELL AUCKLAND 1052
T +64 9 917 5000
W www.harrisongrierson.com

REF	REVISIONS	BY	DATE
B	FOR FAST-TRACK CONSENT STAGE 1	OLZ	01.02.23
A	FOR FAST-TRACK CONSENT STAGE 1	OLZ	27.01.23

PROJECT:
Metlifecare
99 TOTARA ROAD DEVELOPMENT

TITLE:
WASTEWATER STANDARD DETAILS
SHEET 1 OF 2

ORIGINATOR: RZR	DATE: 01.2023	SIGNED:	PLOT BY: OLZ
DRAWN: OLZ	DATE: 01.2023	SIGNED:	PLOT DATE: 02.02.23
CHECKED: RZR	DATE: 27.01.23	SIGNED:	SURVEY BY:
APPROVED: SXS	DATE: 27.01.23	SIGNED:	SURVEY DATE:

ISSUE STATUS:
FOR FAST-TRACK CONSENT STAGE 1

PROJECT No: A2213426-00
SCALES: N.T.S
A1
DRAWING No: A2213426-00-494
REV B

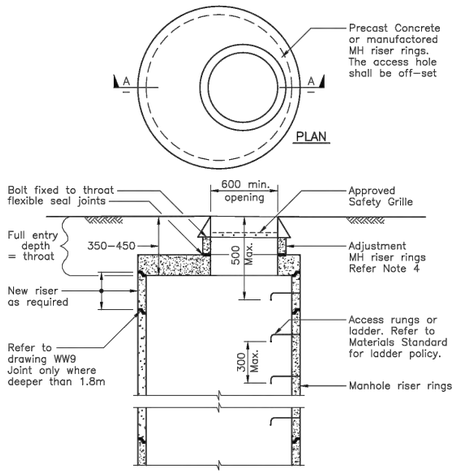

TYPICAL SECTION A–A THROUGH MANHOLE

NOTES:

1. Lid supplied to HN–HO–72 loading and compliance certified.
2. When the throat depth is greater than 450mm, a new manhole riser is required with a new adjustment ring.
3. Refer drawing WW9 for manholes deeper than 1.8m
4. Refer drawing WW7 for sloping ground.
5. Refer drawing WW5 for manhole details.
6. Approved Safety Grille below access manhole cover.
7. Manhole covers in the road shall be constructed so that the cover hinge is facing the oncoming traffic. (Refer Fig 1)
8. For all other covers the orientation should be so that the cover hinge is at 90 degrees from the ladder, Either side. (Refer Fig 2)

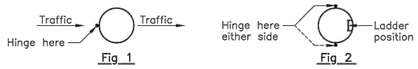

Fig 1 Fig 2

O:\——\ EDCADFI \ 2017 \ WATER & WASTEWATER NETWORK STD DWGS \ 2010070.029C .DWG

Watercare

COPYRIGHT — This drawing, the design shown and the work embodied is the property of Watercare Services Limited and may not be used without approval. Copyright reserved.

TYPICAL MANHOLE THROAT AND COVER DETAILS

SCALE:	N.T.S.
ISSUE DATE:	13–07–2018
DWG No.	2010070.029C
REFERENCE No.	WW 6

Fig.3

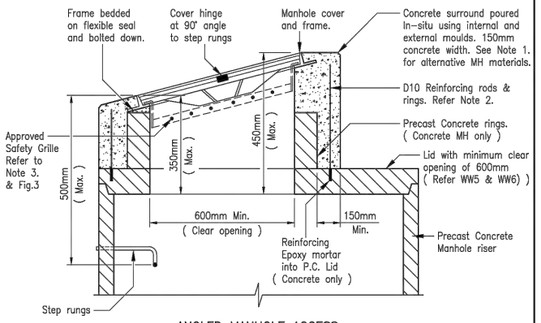

ANGLED MANHOLE ACCESS

NOTES :

1. MH material other than concrete cut to suit on–site.
2. D10 vertical reinf. rods & horizontal rings to be spaced at 300mm max. crs.
3. Approved Safety Grille below access manhole cover.
4. Manhole covers in road shall be constructed so that the cover hinge is facing the oncoming traffic. (Refer Fig.1)
5. For all other covers the orientation shall be so that the cover hinge is at 90 degrees from the ladder, either side. (Refer Fig.2)
6. See Fig.3 for safety grilles. Type and position must be considered for angled installation.

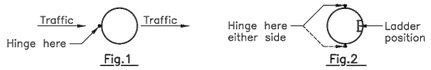

Fig.1 Fig.2

O:\——\ EDCADFI \ 2017 \ WATER & WASTEWATER NETWORK STD DWGS \ 2010070.033D .DWG

Watercare

COPYRIGHT — This drawing, the design shown and the work embodied is the property of Watercare Services Limited and may not be used without approval. Copyright reserved.

ANGLED MANHOLE ACCESS DETAILS

SCALE:	N.T.S.
ISSUE DATE:	13–07–2018
DWG No.	2010070.033D
REFERENCE No.	WW 7

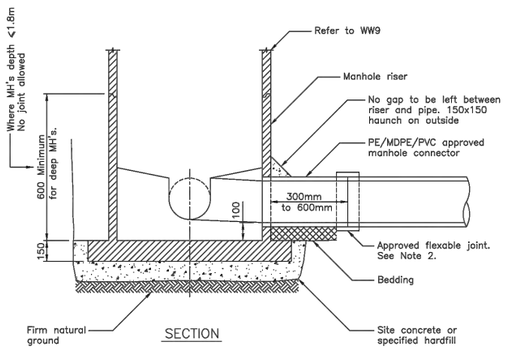

Notes:

1. This drawing shall be read with WW5.
2. For PE pipe connections to a concrete manhole refer to WW11 and WW12 for acceptable solutions.
3. Detail may differ for accepted proprietary manhole systems other than concrete.

O:\——\ EDCADFI \ 2017 \ WATER & WASTEWATER NETWORK STD DWGS \ 2010070.013D .DWG

Watercare

COPYRIGHT — This drawing, the design shown and the work embodied is the property of Watercare Services Limited and may not be used without approval. Copyright reserved.

MANHOLE CONNECTION & STARTER DETAIL

SCALE:	N.T.S.
ISSUE DATE:	06–03–2017
DWG No.	2010070.013D
REFERENCE No.	WW 10

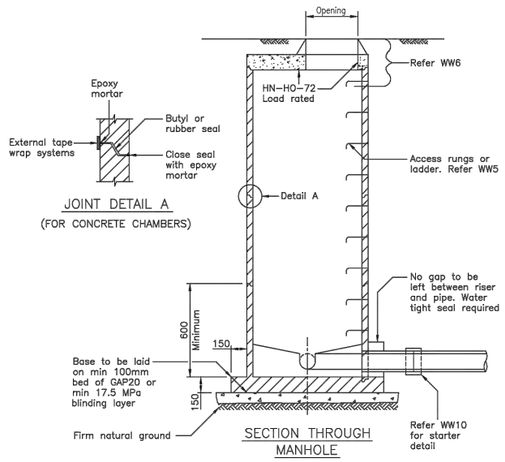

Notes:

1. Refer to WW5 for general details.
2. Channel through manhole to be lined.
3. All manhole openings must be cut.
4. For droppers refer to WW13
5. The manhole diameter shall be increased to minimum internal 1200mm for all manholes greater than 3.0 metres deep.
6. For manholes > 6.0 meters deep the minimum internal diameter shall be 1500mm.
7. Refer WW6 for manhole throat and cover details.
8. Manholes greater than 6m deep must be installed with landing platforms. Refer drawing in (Transmission drawing set)

O:\——\ EDCADFI \ 2017 \ WATER & WASTEWATER NETWORK STD DWGS \ 2010070.012D .DWG

Watercare

COPYRIGHT — This drawing, the design shown and the work embodied is the property of Watercare Services Limited and may not be used without approval. Copyright reserved.

MANHOLES > 1.8m DEEP

SCALE:	N.T.S.
ISSUE DATE:	13–03–2017
DWG No.	2010070.012D
REFERENCE No.	WW 9

FAST-TRACK CONSENT

ASSOCIATION OF CONSULTING ENGINEERS NEW ZEALAND

ISO 9001 QUALITY ASSURED

THIS DRAWING AND DESIGN REMAINS THE PROPERTY OF, AND MAY NOT BE REPRODUCED OR ALTERED, WITHOUT THE WRITTEN PERMISSION OF HARRISON GRIERSON CONSULTANTS LIMITED. NO LIABILITY SHALL BE ACCEPTED FOR UNAUTHORISED USE OF THIS DRAWING.

AUCKLAND OFFICE
LEVEL 4, 96 ST GEORGES BAY ROAD
PARNELL AUCKLAND 1052
T +64 9 917 5000
W www.harrisongrierson.com

REF	REVISIONS	BY	DATE
B	FOR FAST-TRACK CONSENT STAGE 1	OLZ	01.02.23
A	FOR FAST-TRACK CONSENT STAGE 1	OLZ	27.01.23

PROJECT:

Metlifecare

99 TOTARA ROAD DEVELOPMENT

TITLE:

WASTEWATER STANDARD DETAILS
SHEET 2 OF 2

ORIGINATOR: RZR	DATE: 01.2023	SIGNED:	PLOT BY: OLZ
DRAWN: OLZ	DATE: 01.2023	SIGNED:	PLOT DATE: 02.02.23
CHECKED: RZR	DATE: 27.01.23	SIGNED:	SURVEY BY:
APPROVED: SXS	DATE: 27.01.23	SIGNED:	SURVEY DATE:

ISSUE STATUS: FOR FAST-TRACK CONSENT STAGE 1

PROJECT No: A2213426-00 | SCALES: N.T.S | A1

DRAWING No: A2213426-00-495 | REV B

REFER TO APPROVED MASTER DRAWINGS FOR ORIGINAL SIGNATURES File: DATA\LOCAL\AUTODESK\C3D 2022\ENU\TEMPLATE N:\1050\A2213426.00_A TOTARA ROAD\CAD\CAD - SHEETS\A2213426-00 - 490 - DRAINAGE STANDARD DETAILS.DWG

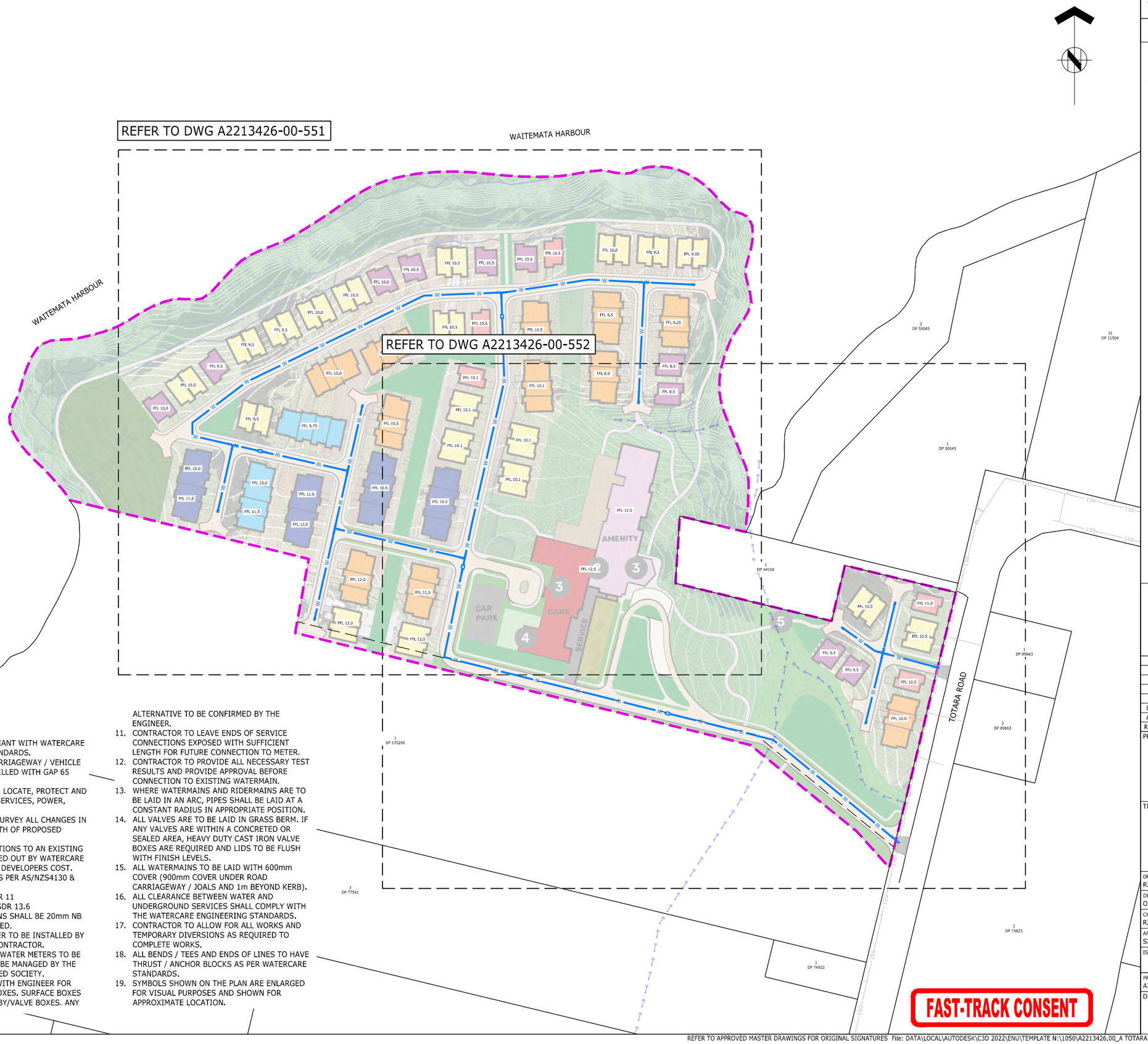

WATER NOTES:

1. ALL WORKS TO BE COMPLIANT WITH WATERCARE AND BUILDING CODE STANDARDS.
2. ALL TRENCHES UNDER CARRIAGEWAY / VEHICLE CROSSINGS TO BE BACKFILLED WITH GAP 65 HARDFILL.
3. CONTRACTOR TO SEARCH, LOCATE, PROTECT AND MAINTAIN ALL EXISTING SERVICES, POWER, TELECOM, GAS, etc.
4. CONTRACTOR TO FIX BY SURVEY ALL CHANGES IN DIRECTION AND / OR DEPTH OF PROPOSED WATERMAIN.
5. ALL WORKS AND CONNECTIONS TO AN EXISTING WATERMAIN TO BE CARRIED OUT BY WATERCARE WATER CONTRACTORS AT DEVELOPERS COST.
6. WATERMAINS SHALL BE AS PER AS/NZS4130 & 4131:
   - DN 63 PE 80 PN 12.5 SDR 11
   - DN 125 PE 100 PN 12.5 SDR 13.6
7. ALL SERVICE CONNECTIONS SHALL BE 20mm NB UNLESS OTHERWISE STATED.
8. PUBLIC BULK WATER METER TO BE INSTALLED BY APPROVED WATERCARE CONTRACTOR.
9. PRIVATE INDIVIDUAL LOT WATER METERS TO BE INSTALLED, WHICH IS TO BE MANAGED BY THE NOMINATED INCORPORATED SOCIETY.
10. CONTRACTOR TO LIAISE WITH ENGINEER FOR LOCATION OF SURFACE BOXES. SURFACE BOXES ARE TO BE STANDARD TOBY/VALVE BOXES. ANY ALTERNATIVE TO BE CONFIRMED BY THE ENGINEER.
11. CONTRACTOR TO LEAVE ENDS OF SERVICE CONNECTIONS EXPOSED WITH SUFFICIENT LENGTH FOR FUTURE CONNECTION TO METER.
12. CONTRACTOR TO PROVIDE ALL NECESSARY TEST RESULTS AND PROVIDE APPROVAL BEFORE CONNECTION TO EXISTING WATERMAIN.
13. WHERE WATERMAINS AND RIDERMAINS ARE TO BE LAID IN AN ARC, PIPES SHALL BE LAID AT A CONSTANT RADIUS IN APPROPRIATE POSITION.
14. ALL VALVES ARE TO BE LAID IN GRASS BERM. IF ANY VALVES ARE WITHIN A CONCRETED OR SEALED AREA, HEAVY DUTY CAST IRON VALVE BOXES ARE REQUIRED AND LIDS TO BE FLUSH WITH FINISH LEVELS.
15. ALL WATERMAINS TO BE LAID WITH 600mm COVER (900mm COVER UNDER ROAD CARRIAGEWAY / JOALS AND 1m BEYOND KERB).
16. ALL CLEARANCE BETWEEN WATER AND UNDERGROUND SERVICES SHALL COMPLY WITH THE WATERCARE ENGINEERING STANDARDS.
17. CONTRACTOR TO ALLOW FOR ALL WORKS AND TEMPORARY DIVERSIONS AS REQUIRED TO COMPLETE WORKS.
18. ALL BENDS / TEES AND ENDS OF LINES TO HAVE THRUST / ANCHOR BLOCKS AS PER WATERCARE STANDARDS.
19. SYMBOLS SHOWN ON THE PLAN ARE ENLARGED FOR VISUAL PURPOSES AND SHOWN FOR APPROXIMATE LOCATION.

FAST-TRACK CONSENT

ASSOCIATION OF CONSULTING ENGINEERS NEW ZEALAND

ISO 9001 QUALITY ASSURED

THIS DRAWING AND DESIGN REMAINS THE PROPERTY OF, AND MAY NOT BE REPRODUCED OR ALTERED, WITHOUT THE WRITTEN PERMISSION OF HARRISON GRIERSON CONSULTANTS LIMITED. NO LIABILITY SHALL BE ACCEPTED FOR UNAUTHORISED USE OF THIS DRAWING.

LEGEND:

- SITE BOUNDARY
- PROPOSED PRIVATE PE WATERMAIN
- PROPOSED PRIVATE SLUICE VALVE
- PROPOSED PRIVATE BLANK CAP
- WM — PROPOSED PUBLIC BULK WATER METER
- FH — PROPOSED PRIVATE FIRE HYDRANT
- 150 — EXISTING PUBLIC WATERMAIN
- FH — EXISTING PUBLIC FIRE HYDRANT

HG
AUCKLAND OFFICE
LEVEL 4, 96 ST GEORGES BAY ROAD
PARNELL AUCKLAND 1052
T +64 9 917 5000
W www.harrisongrierson.com

REF	REVISIONS	BY	DATE
B	FOR FAST-TRACK CONSENT	OLZ	01.02.23
A	FOR FAST-TRACK CONSENT	OLZ	27.01.23

PROJECT:
Metlifecare
99 TOTARA ROAD DEVELOPMENT

TITLE:
WATER RETICULATION
OVERALL LAYOUT PLAN

ORIGINATOR: RZR	DATE: 01.2023	SIGNED:	PLOT BY: OLZ
DRAWN: OLZ	DATE: 01.2023	SIGNED:	PLOT DATE: 02.02.23
CHECKED: RZR	DATE: 27.01.23	SIGNED:	SURVEY BY:
APPROVED: SXS	DATE: 27.01.23	SIGNED:	SURVEY DATE:

ISSUE STATUS: FOR FAST-TRACK CONSENT STAGE 1

PROJECT No: A2213426-00
SCALES: 1:1000 - A1, 1:2000 - A3
A1

DRAWING No: A2213426-00-550
REV B

FAST-TRACK CONSENT

ASSOCIATION OF CONSULTING ENGINEERS NEW ZEALAND

ISO 9001 QUALITY ASSURED

THIS DRAWING AND DESIGN REMAINS THE PROPERTY OF, AND MAY NOT BE REPRODUCED OR ALTERED, WITHOUT THE WRITTEN PERMISSION OF HARRISON GRIERSON CONSULTANTS LIMITED. NO LIABILITY SHALL BE ACCEPTED FOR UNAUTHORISED USE OF THIS DRAWING.

NOTES:

1. REFER TO DWG A2213426-00-550 FOR WATER CONSTRUCTION NOTES.
2. THE WATER SUPPLY NETWORK DESIGN IS PRELIMINARY ONLY.
3. THE FFLS ARE PRELIMINARY AND SHALL BE FINALISED ONCE THE OLFP ASSESSMENT IS DONE AT LATER STAGE

LEGEND:

- SITE BOUNDARY
- PROPOSED PRIVATE PE WATERMAIN
- PROPOSED PRIVATE SLUICE VALVE
- PROPOSED PRIVATE BLANK CAP
- WM — PROPOSED PUBLIC BULK WATER METER
- FH — PROPOSED PRIVATE FIRE HYDRANT
- 150 — EXISTING PUBLIC WATERMAIN
- FH — EXISTING PUBLIC FIRE HYDRANT

HG
AUCKLAND OFFICE
LEVEL 4, 96 ST GEORGES BAY ROAD
PARNELL AUCKLAND 1052
T +64 9 917 5000
W www.harrisongrierson.com

REF	REVISIONS	BY	DATE
B	FOR FAST-TRACK CONSENT	OLZ	01.02.23
A	FOR FAST-TRACK CONSENT	OLZ	27.01.23

PROJECT:
Metlifecare
99 TOTARA ROAD DEVELOPMENT

TITLE:
WATER RETICULATION
LAYOUT PLAN
SHEET 1 OF 2

ORIGINATOR: RZR	DATE: 01.2023	SIGNED:	PLOT BY: OLZ
DRAWN: OLZ	DATE: 01.2023	SIGNED:	PLOT DATE: 02.02.23
CHECKED: RZR	DATE: 27.01.23	SIGNED:	SURVEY BY:
APPROVED: SXS	DATE: 27.01.23	SIGNED:	SURVEY DATE:

ISSUE STATUS: FOR FAST-TRACK CONSENT STAGE 1

PROJECT No: A2213426-00
SCALES: 1:500 - A1, 1:1000 - A3
A1

DRAWING No: A2213426-00-551
REV B

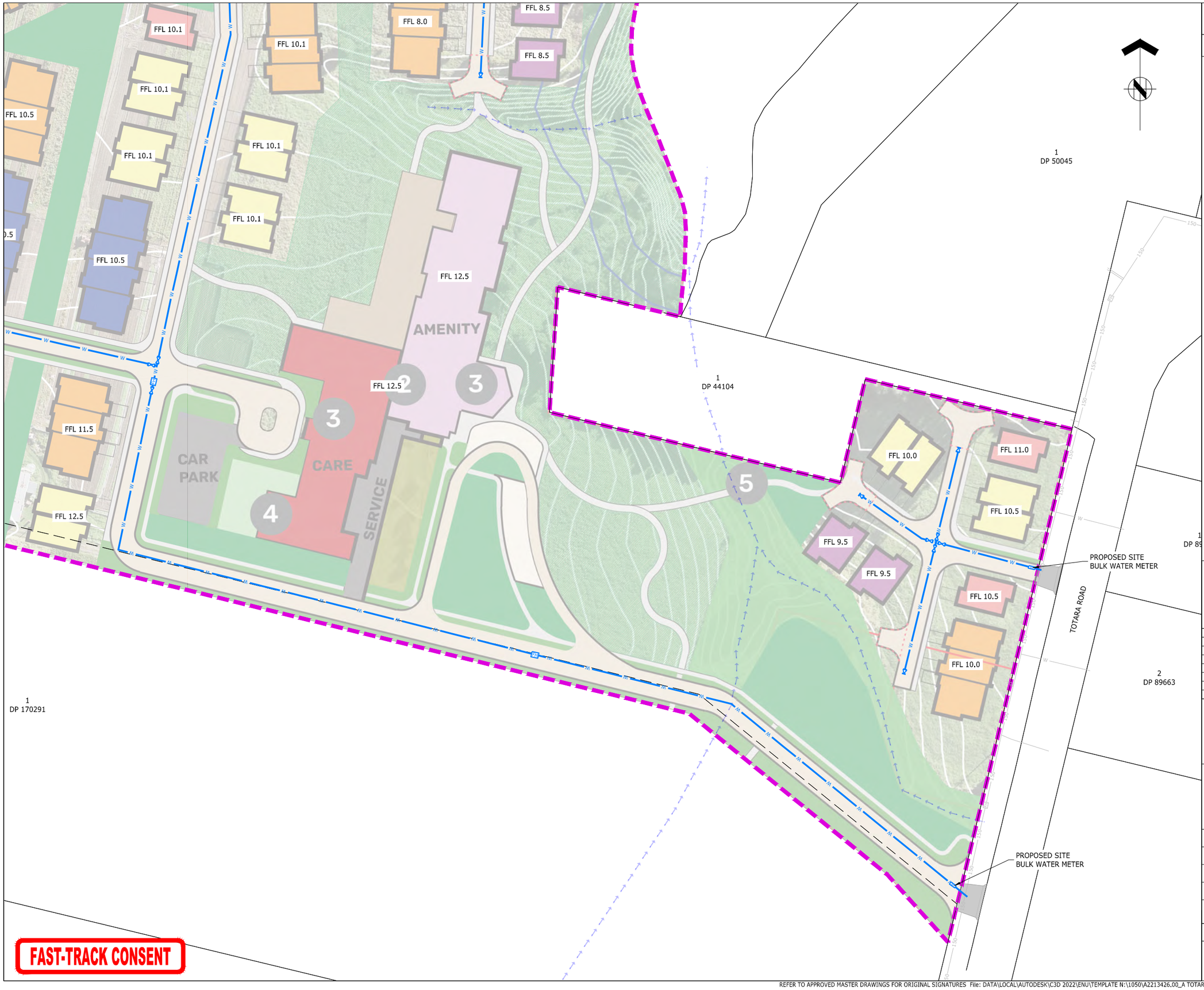

ASSOCIATION OF CONSULTING ENGINEERS NEW ZEALAND

ISO 9001 QUALITY ASSURED

THIS DRAWING AND DESIGN REMAINS THE PROPERTY OF, AND MAY NOT BE REPRODUCED OR ALTERED, WITHOUT THE WRITTEN PERMISSION OF HARRISON GRIERSON CONSULTANTS LIMITED. NO LIABILITY SHALL BE ACCEPTED FOR UNAUTHORISED USE OF THIS DRAWING.

NOTES:

1. REFER TO DWG A2213426-00-550 FOR WATER CONSTRUCTION NOTES.
2. THE WATER SUPPLY NETWORK DESIGN IS PRELIMINARY ONLY.
3. THE FFLS ARE PRELIMINARY AND SHALL BE FINALISED ONCE THE OLFP ASSESSMENT IS DONE AT LATER STAGE

LEGEND:

- SITE BOUNDARY
- PROPOSED PRIVATE PE WATERMAIN
- PROPOSED PRIVATE SLUICE VALVE
- PROPOSED PRIVATE BLANK CAP
- WM — PROPOSED PUBLIC BULK WATER METER
- FH — PROPOSED PRIVATE FIRE HYDRANT
- 150 — EXISTING PUBLIC WATERMAIN
- FH — EXISTING PUBLIC FIRE HYDRANT

AUCKLAND OFFICE
LEVEL 4, 96 ST GEORGES BAY ROAD
PARNELL AUCKLAND 1052
T +64 9 917 5000
W www.harrisongrierson.com

REF	REVISIONS	BY	DATE
B	FOR FAST-TRACK CONSENT	OLZ	01.02.23
A	FOR FAST-TRACK CONSENT	OLZ	27.01.23

PROJECT:
Metlifecare
99 TOTARA ROAD DEVELOPMENT

TITLE:
WATER RETICULATION
LAYOUT PLAN
SHEET 2 OF 2

ORIGINATOR: RZR	DATE: 01.2023	SIGNED:	PLOT BY: OLZ
DRAWN: OLZ	DATE: 01.2023	SIGNED:	PLOT DATE: 02.02.23
CHECKED: RZR	DATE: 27.01.23	SIGNED:	SURVEY BY:
APPROVED: SXS	DATE: 27.01.23	SIGNED:	SURVEY DATE:

ISSUE STATUS:
FOR FAST-TRACK CONSENT STAGE 1

PROJECT No:	SCALES:	
A2213426-00	1:500 - A1 1:1000 - A3	A1

DRAWING No: A2213426-00-552
REV B

REFER TO APPROVED MASTER DRAWINGS FOR ORIGINAL SIGNATURES File: DATA\LOCAL\AUTODESK\C3D 2022\ENU\TEMPLATE N:\1050\A2213426.00_A TOTARA ROAD\CAD\CAD - SHEETS\A2213426-00 - 550 - WATER RETICULATION.DWG

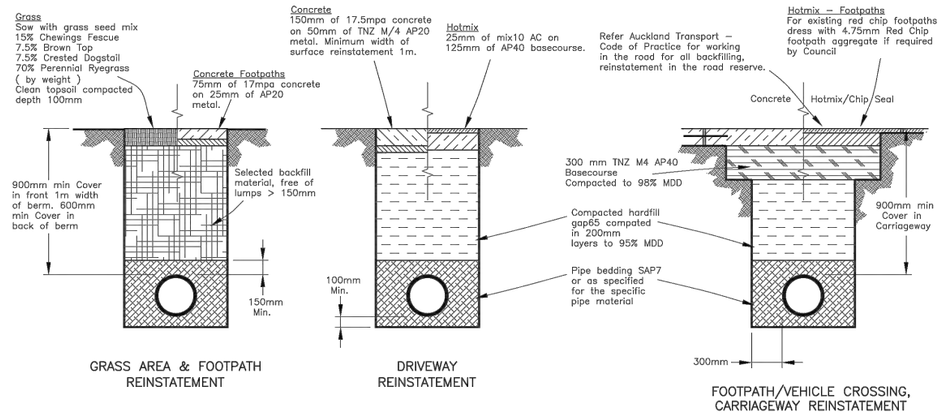

GRASS AREA & FOOTPATH REINSTATEMENT

DRIVEWAY REINSTATEMENT

FOOTPATH/VEHICLE CROSSING, CARRIAGEWAY REINSTATEMENT

NOTES
1. Trench reinstatement within the road reserve shall comply with the Auckland Transport requirements.
2. Backfill is to be compacted in 200mm, layers to obtain maximum density, as per standard specifications.
3. Where concrete or other stabilized layers exist in the roadway, the trench shall be reinstated with similar material or as directed by the roading engineer.
4. Minimum cover in carriageway for watermains 900mm. 900mm cover in front 1m of berm and Minimum 600mm in the back of berm.
5. Fill shall be clean, Non-contaminated material. Recycled material is not acceptable.
6. Pipe bedding shall be compacted to AS/NZS 2566.2 clause 5.6.3 for compaction control.
7. Alternative embedment details by specific design for pipe at steep grades, inadequate trench foundation and erosion is not covered by this drawing.

O:\---\, EDGERT \, 2017 \, WATER & WASTEWATER NETWORK STD DWGS \, 2010069.001D .DWG

Watercare

COPYRIGHT – This drawing, the design concept, remain the exclusive property of Watercare Services Limited and may not be used without approval. Copyright reserved.

TYPICAL TRENCH REINSTATEMENT AND BEDDING DETAILS FOR WATER SUPPLY

SCALE:	N.T.S.
ISSUE DATE:	28–09–2017
DWG No.	2010069.001D
REFERENCE No.	WS 2

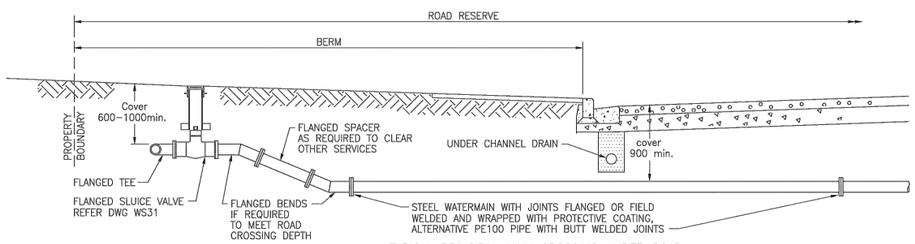

TYPICAL PRINCIPAL MAIN CROSSING UNDER ROAD
N.T.S.

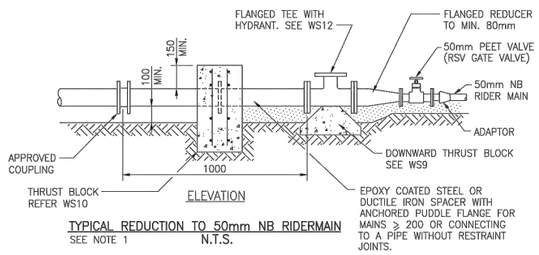

TYPICAL REDUCTION TO 50mm NB RIDERMAIN
SEE NOTE 1 N.T.S.

NOTES
1. FOR AN ALTERNATIVE RIDERMAIN CONNECTION SEE WS5.
2. PIPE AND BENDS TO BE SUPPORTED AN CORROSION PROTECTED.
3. ALL SPECIAL FITTINGS INCLUDING TEES AND BENDS TO BE FLANGED DUCTILE IRON OR AN ACCEPTED PROPRIETARY ALTERNATIVE.

O:\---\, EDGERT \, 2017 \, WATER & WASTEWATER NETWORK STD DWGS \, 2010069.004C .DWG

Watercare

COPYRIGHT – This drawing, the design concept, remain the exclusive property of Watercare Services Limited and may not be used without approval. Copyright reserved.

ROAD CROSSING DETAILS AND PRINCIPAL MAIN TO RIDER MAIN CONNECTIONS

SCALE:	N.T.S.
ISSUE DATE:	13–07–2018
DWG No.	2010069.004C
REFERENCE No.	WS 4

ASSOCIATION OF CONSULTING ENGINEERS NEW ZEALAND

ISO 9001 QUALITY ASSURED

THIS DRAWING AND DESIGN REMAINS THE PROPERTY OF, AND MAY NOT BE REPRODUCED OR ALTERED, WITHOUT THE WRITTEN PERMISSION OF HARRISON GRIERSON CONSULTANTS LIMITED. NO LIABILITY SHALL BE ACCEPTED FOR UNAUTHORISED USE OF THIS DRAWING.

AUCKLAND OFFICE
LEVEL 4, 96 ST GEORGES BAY ROAD
PARNELL AUCKLAND 1052
T +64 9 917 5000
W www.harrisongrierson.com

REF	REVISIONS	BY	DATE
B	FOR FAST-TRACK CONSENT	OLZ	01.02.23
A	FOR FAST-TRACK CONSENT	OLZ	27.01.23

PROJECT:
Metlifecare
99 TOTARA ROAD DEVELOPMENT

TITLE:
WATER STANDARD DETAILS
SHEET 1 OF 4

ORIGINATOR: RZR	DATE: 01.2023	SIGNED:	PLOT BY: OLZ
DRAWN: OLZ	DATE: 01.2023	SIGNED:	PLOT DATE: 02.02.23
CHECKED: RZR	DATE: 27.01.23	SIGNED:	SURVEY BY:
APPROVED: SXS	DATE: 27.01.23	SIGNED:	SURVEY DATE:

ISSUE STATUS:
FOR FAST-TRACK CONSENT STAGE 1

PROJECT No: A2213426-00	SCALES: N.T.S	A1
DRAWING No: A2213426-00-590		REV B

FAST-TRACK CONSENT

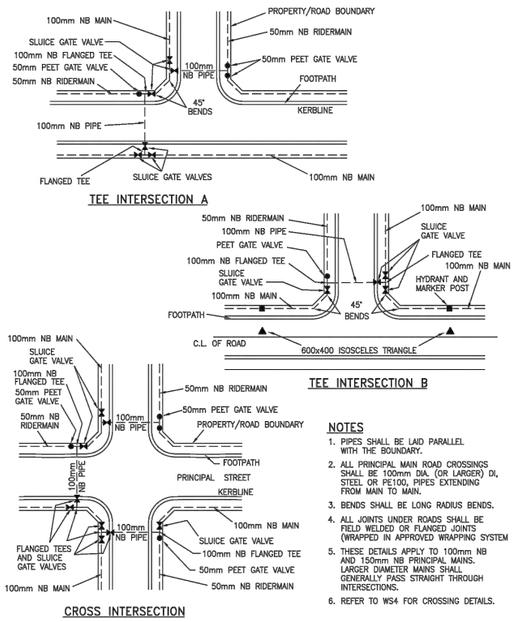

NOTES

1. PIPES SHALL BE LAID PARALLEL WITH THE BOUNDARY.
2. ALL PRINCIPAL MAIN ROAD CROSSINGS SHALL BE 100mm DIA. (OR LARGER) DI, STEEL OR PE100, PIPES EXTENDING FROM MAIN TO MAIN.
3. BENDS SHALL BE LONG RADIUS BENDS.
4. ALL JOINTS UNDER ROADS SHALL BE FIELD WELDED OR FLANGED JOINTS (WRAPPED IN APPROVED WRAPPING SYSTEM
5. THESE DETAILS APPLY TO 100mm NB AND 150mm NB PRINCIPAL MAINS. LARGER DIAMETER MAINS SHALL GENERALLY PASS STRAIGHT THROUGH INTERSECTIONS.
6. REFER TO WS4 FOR CROSSING DETAILS.

O:\——\ESCADR\ 2017 \ WATER & WASTEWATER NETWORK STD DWGS \ 20100069.003B .DWG

Watercare

COPYRIGHT — This drawing, the design concept, details the exclusive property of Watercare Services Limited and may not be used without approval. Copyright reserved.

TYPICAL WATERMAIN INTERSECTION LAYOUT

SCALE:	N.T.S.
ISSUE DATE:	13-03-2017
DWG No.	2010069.003B
REFERENCE No.	WS 3

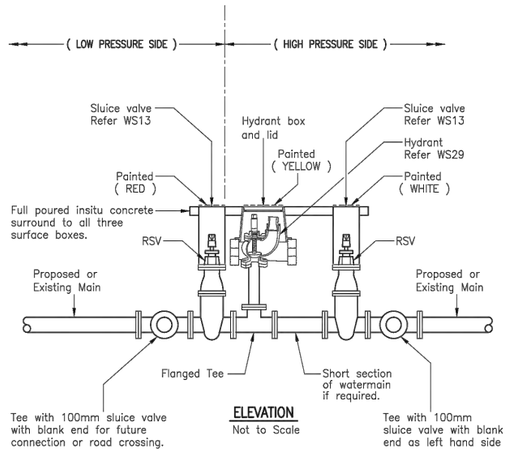

ELEVATION
Not to Scale

NOTES :

1. All surface boxes and marker posts to be painted in accordance with the color code specified on drawing number WS7.
2. The RSV gate valve on the high pressure side is to remain in the open position and the valve box lid to be painted (WHITE).
3. The RSV gate valve on the low pressure side is to remain in the closed position and the valve box lids to be painted (RED). The valve access sleeve shall be filled with an expansion foam after acceptance testing.
4. The Hydrant box lid to be painted (YELLOW).
5. Valves and hydrants shall be supported on a concrete base and not pass any loading onto the connecting pipe. For hydrant support see WS9.

O:\——\ESCADR\ 2017 \ WATER & WASTEWATER NETWORK STD DWGS \ 20100069.005C .DWG

Watercare

COPYRIGHT — This drawing, the design concept, details the exclusive property of Watercare Services Limited and may not be used without approval. Copyright reserved.

BOUNDARY ZONE DETAIL

SCALE:	N.T.S.
ISSUE DATE:	13-07-2018
DWG No.	2010069.005C
REFERENCE No.	WS 6

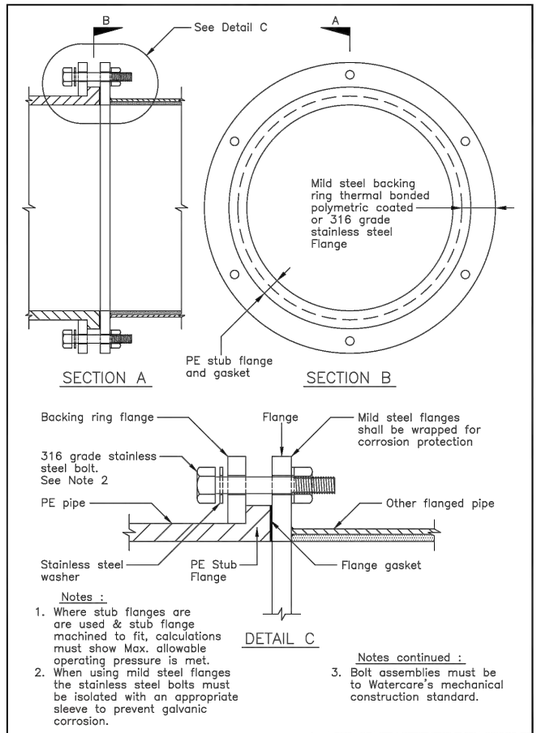

Notes :

1. Where stub flanges are are used & stub flange machined to fit, calculations must show Max. allowable operating pressure is met.
2. When using mild steel flanges the stainless steel bolts must be isolated with an appropriate sleeve to prevent galvanic corrosion.

Notes continued :

3. Bolt assemblies must be to Watercare's mechanical construction standard.

O:\——\ESCADR\ 2017 \ WATER & WASTEWATER NETWORK STD DWGS \ 20100069.034B .DWG

Watercare

COPYRIGHT — This drawing, the design concept, details the exclusive property of Watercare Services Limited and may not be used without approval. Copyright reserved.

FLANGE CONNECTION DETAIL PE MAIN TO OTHER

SCALE:	N.T.S.
ISSUE DATE:	10-02-2017
DWG No.	2010069.034B
REFERENCE No.	WS 11

Notes :

1. Thrust block dimensions are based on firm soil conditions.
2. The dimensions to be increased or decreased for variation in soil conditions.
3. Allowable bearing stress used – 100KPa.
4. As built locations to be obtained prior to backfill.
5. Protective membrane (Polythene) between concrete & pipe.
6. 75mm clearance between fittings/flanges and concrete casting.
7. All fittings to be wrapped with a suitable wrapping system.

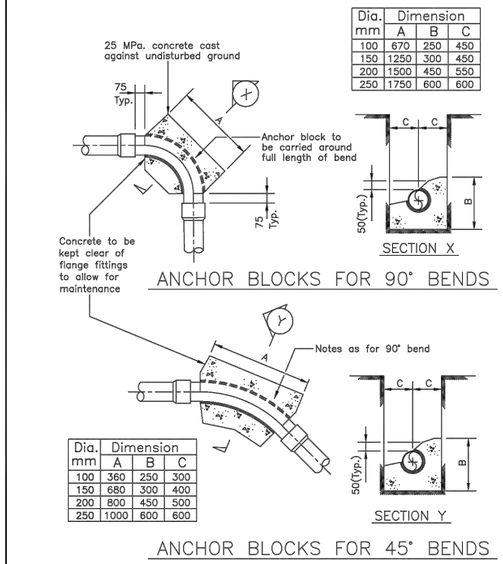

Dia. mm	Dimension A	B	C
100	670	250	450
150	1250	300	450
200	1500	450	550
250	1750	600	600

ANCHOR BLOCKS FOR 90° BENDS

Dia. mm	Dimension A	B	C
100	360	250	300
150	680	300	400
200	800	450	500
250	1000	600	600

ANCHOR BLOCKS FOR 45° BENDS

O:\——\ESCADR\ 2017 \ WATER & WASTEWATER NETWORK STD DWGS \ 20100069.013B .DWG

Watercare

COPYRIGHT — This drawing, the design concept, details the exclusive property of Watercare Services Limited and may not be used without approval. Copyright reserved.

ANCHOR BLOCK DETAILS FOR 90° & 45° BENDS

SCALE:	N.T.S.
ISSUE DATE:	10-02-2017
DWG No.	2010069.013B
REFERENCE No.	WS 8

Notes :

1. Thrust block dimensions are based on firm soil conditions.
2. The dimensions to be increased or decreased for variation in soil conditions.
3. Allowable bearing stress used – 100KPa.
4. As built locations to be obtained prior to backfill.
5. Protective membrane (Polythene) between concrete & pipe.
6. 75mm clearance between fittings/flanges and concrete casting.
7. All fittings to be wrapped with a suitable wrapping system.

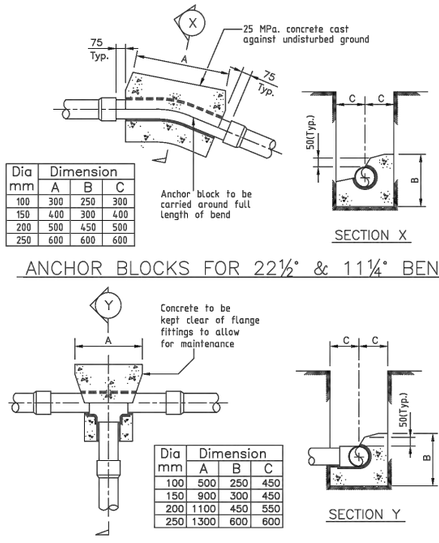

Dia mm	Dimension A	B	C
100	300	250	300
150	400	300	400
200	500	450	500
250	600	600	600

ANCHOR BLOCKS FOR 22½° & 11¼° BENDS

Dia mm	Dimension A	B	C
100	500	250	450
150	900	300	450
200	1100	450	550
250	1300	600	600

ANCHOR BLOCKS TEE JUNCTION & END CAPS

O:\——\ESCADR\ 2017 \ WATER & WASTEWATER NETWORK STD DWGS \ 20100069.014B .DWG

Watercare

COPYRIGHT — This drawing, the design concept, details the exclusive property of Watercare Services Limited and may not be used without approval. Copyright reserved.

ANCHOR BLOCK DETAILS FOR 22½° & 11¼° BENDS AND TEE JUNCTION

SCALE:	N.T.S.
ISSUE DATE:	10-02-2017
DWG No.	2010069.014B
REFERENCE No.	WS 9

Notes :

1. Concrete thrust block dimensions are based on firm soil conditions.
2. The dimensions to be increased or decreased for variation in soil conditions.
3. Allowable bearing stress used – 100KPa.
4. As built locations to be obtained prior to backfill.
5. Protective membrane (Polythene) between concrete and pipe.
6. 75mm clearance between fittings/flanges and concrete casting.
7. All fittings to be wrapped with a suitable wrapping system.

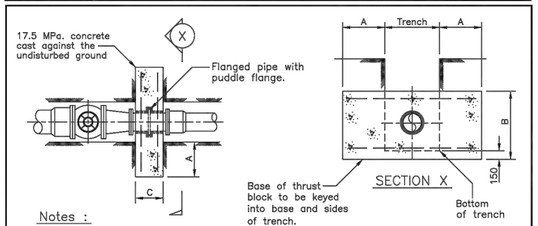

Reducer mm	Reducers A	B	C
100–150	250	350	300
100–200	500	350	300
150–200	250	500	300
150–250	500	500	300
200–250	250	600	300
200–300	400	700	300

ANCHOR BLOCKS AT REDUCERS

Pipe Dia	Vertical Bends–45° a	b	c
100mm	600	800	700
150mm	800	1000	800
200mm	1000	1200	800
250mm	1000	1600	1000

Pipe Dia	Vertical Bends–22.5° a	b	c
100mm	500	500	500
150mm	500	800	800
200mm	700	1000	800
250mm	800	1200	900

Pipe Dia	Vertical Bends–11.25° a	b	c
100mm	400	500	500
150mm	500	600	600
200mm	500	800	800
250mm	700	1000	800

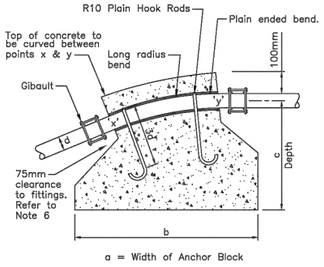

ANCHOR BLOCKS AT BENDS IN VERTICAL PLANE

O:\——\ESCADR\ 2017 \ WATER & WASTEWATER NETWORK STD DWGS \ 20100069.015B .DWG

Watercare

COPYRIGHT — This drawing, the design concept, details the exclusive property of Watercare Services Limited and may not be used without approval. Copyright reserved.

ANCHOR BLOCK DETAILS REDUCERS AND VERTICAL BENDS

SCALE:	N.T.S.
ISSUE DATE:	10-02-2017
DWG No.	2010069.015B
REFERENCE No.	WS 10

FAST-TRACK CONSENT

ACENZ — ASSOCIATION OF CONSULTING ENGINEERS NEW ZEALAND — ISO 9001 QUALITY ASSURED

THIS DRAWING AND DESIGN REMAINS THE PROPERTY OF, AND MAY NOT BE REPRODUCED OR ALTERED, WITHOUT THE WRITTEN PERMISSION OF HARRISON GRIERSON CONSULTANTS LIMITED. NO LIABILITY SHALL BE ACCEPTED FOR UNAUTHORISED USE OF THIS DRAWING.

HG
AUCKLAND OFFICE
LEVEL 4, 96 ST GEORGES BAY ROAD
PARNELL AUCKLAND 1052
T +64 9 917 5000
W www.harrisongrierson.com

REF	REVISIONS	BY	DATE
B	FOR FAST-TRACK CONSENT	OLZ	01.02.23
A	FOR FAST-TRACK CONSENT	OLZ	27.01.23

PROJECT:
Metlifecare
99 TOTARA ROAD DEVELOPMENT

TITLE:
WATER STANDARD DETAILS
SHEET 2 OF 4

ORIGINATOR: RZR	DATE: 01.2023	SIGNED:	PLOT BY: OLZ
DRAWN: OLZ	DATE: 01.2023	SIGNED:	PLOT DATE: 02.02.23
CHECKED: RZR	DATE: 27.01.23	SIGNED:	SURVEY BY:
APPROVED: SXS	DATE: 27.01.23	SIGNED:	SURVEY DATE:

ISSUE STATUS: FOR FAST-TRACK CONSENT STAGE 1

PROJECT No: A2213426-00 — SCALES: N.T.S — A1

DRAWING No: A2213426-00-591 — REV B

REFER TO APPROVED MASTER DRAWINGS FOR ORIGINAL SIGNATURES File: DATA\LOCAL\AUTODESK\C3D 2022\ENU\TEMPLATE N:\1050\A2213426.00_A TOTARA ROAD\CAD\CAD - SHEETS\A2213426-00 - 590 - WATER STANDARD DETAILS.DWG

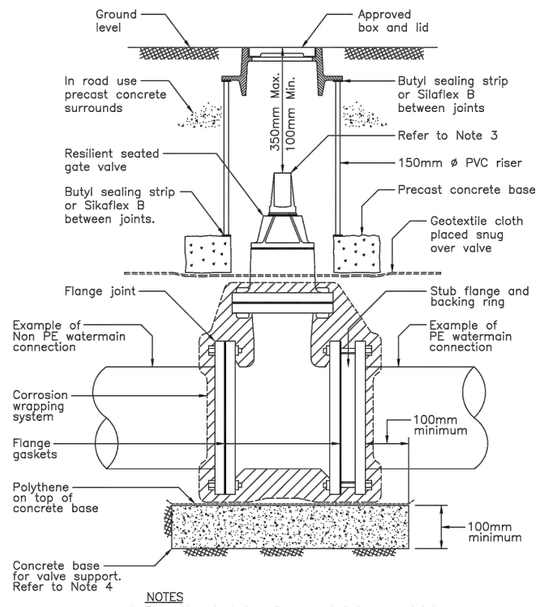

NOTES

1. The valve, including flanges shall be completely wrapped in approved corrosion protected wrapping system to the wrapping manufacturers requirements.
2. Refer WS11 for typical notes on flange bolting .
3. An extension spindle shall be incorperated as required to ensure the top of the spindle is no more than 350mm below the finished surface level.
4. For valves 150mm and greater the valve shall be supported on a in-situ cast concrete base of suitable dimension to prevent any loads transfered to the pipe.

O:\----\ESCAPI\2017\WATER & WASTEWATER NETWORK STD DWGS\20100690.029B.DWG

Watercare

COPYRIGHT – This drawing, the design concept, remain the exclusive property of Harrison Grierson Consultants Limited and may not be used without approval. Copyright reserved.

FLANGED SLUICE VALVE DETAIL

SCALE:	N.T.S.
ISSUE DATE:	26-05-2017
DWG No.	2010069.029B
REFERENCE No.	WS 13

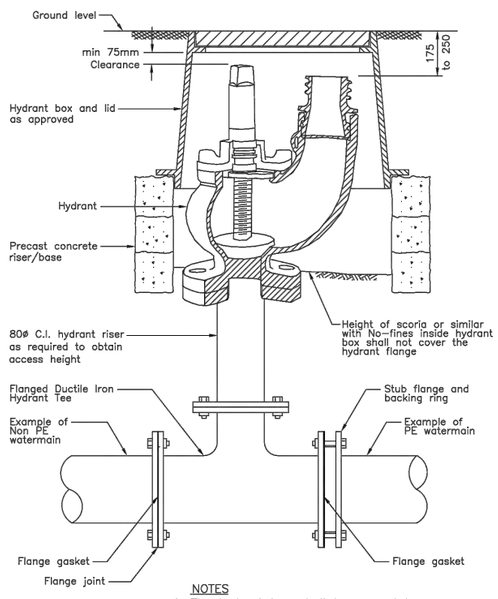

NOTES

1. The hydrant box shall be spaced to provide clear access to the valve spindle and outlet.
2. All flanges and fittings shall be wrapped with suitable corrosion protection wrapping to the manufacturers requirements. Refer WS11
3. Concrete support to be provided under hydrant Tee. Refer WS9. (The concrete overbear can be ignored)

O:\----\ESCAPI\2017\WATER & WASTEWATER NETWORK STD DWGS\20100690.027A.DWG

Watercare

COPYRIGHT – This drawing, the design concept, remain the exclusive property of Harrison Grierson Consultants Limited and may not be used without approval. Copyright reserved.

HYDRANT DETAIL

SCALE:	N.T.S.
ISSUE DATE:	06-03-2017
DWG No.	2010069.027A
REFERENCE No.	WS 12

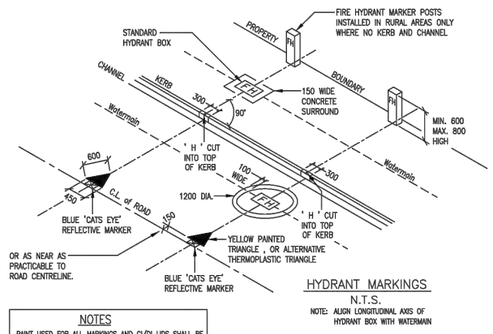

HYDRANT MARKINGS

N.T.S.

NOTE: ALIGN LONGITUDINAL AXIS OF HYDRANT BOX WITH WATERMAIN

NOTES

PAINT USED FOR ALL MARKINGS AND CI/DI LIDS SHALL BE TRANSIT "ROAD MARKING PAINT" AS FOLLOWS:–

HYDRANTS – YELLOW
PROTECTIVE PAINTS LTD.– MAY CODE: 880–403
OR – RESENE M7–W ;
(ALTERNATIVE OPTION THERMOPLASTIC TRIANGLE)

VALVES (PV, SV, AV's) – WHITE

SPECIAL CONTROL VALVES (SHUT) – RED
RESENE RED OXIDE – VINYL ETCH ADHESION PRIMER

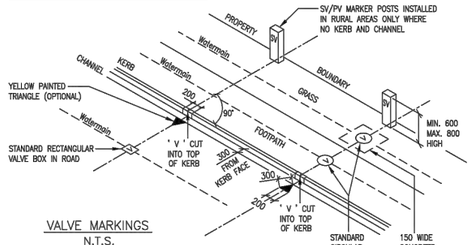

VALVE MARKINGS

N.T.S.

NOTE: ALIGN LONGITUDINAL AXIS OF RECTANGULAR VALVE BOX WITH WATERMAIN ALIGN ' V ' WITH WATERMAIN AS SHOWN

O:\----\ESCAPI\2017\WATER & WASTEWATER NETWORK STD DWGS\20100690.006B.DWG

Watercare

COPYRIGHT – This drawing, the design concept, remain the exclusive property of Harrison Grierson Consultants Limited and may not be used without approval. Copyright reserved.

VALVE AND HYDRANT MARKINGS

SCALE:	N.T.S.
ISSUE DATE:	10-02-2017
DWG No.	2010069.006B
REFERENCE No.	WS 7

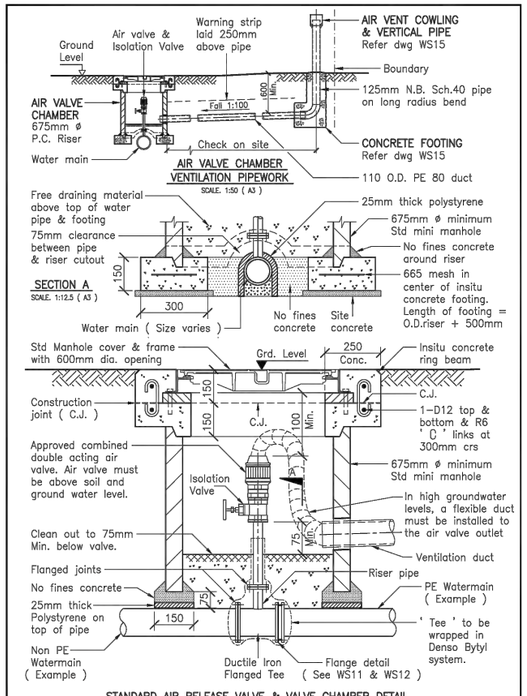

STANDARD AIR RELEASE VALVE & VALVE CHAMBER DETAIL

SCALE. 1:12.5 (A3)

O:\----\ESCAPI\2017\WATER & WASTEWATER NETWORK STD DWGS\20100690.031C.DWG

Watercare

COPYRIGHT – This drawing, the design concept, remain the exclusive property of Harrison Grierson Consultants Limited and may not be used without approval. Copyright reserved.

AIR RELEASE VALVE AND CHAMBER DETAIL

SCALE:	N.T.S.
ISSUE DATE:	13-07-2018
DWG No.	2010069.031C
REFERENCE No.	WS 14

NOTES

1. FOR AIR RELEASE VALVE CHAMBER REFER DWG WS 14
2. PLACE EPOXY MORTAR AROUND VENT PIPE AT AIR VALVE CHAMBER CONCRETE WALL
3. NOTATION:
   C.O.S. = CHECK ON SITE
   N.T.S. = NOT TO SCALE
   O.D. = OVERALL DIAMETER
4. ALL STEEL PIPEWORK & VENT COWLING TO BE HOT DIP GALVANISED AFTER FABRICATION IS COMPLETE
5. THE AIR VENT MUST BE PLACED INSIDE 500mm FROM THE BOUNDARY

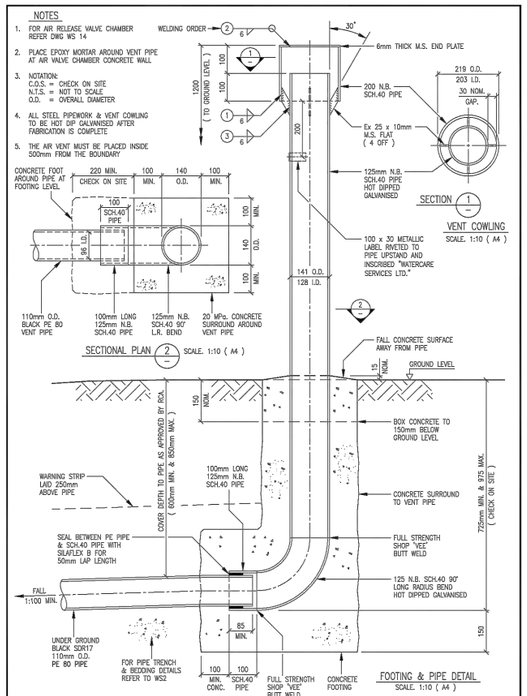

O:\----\ESCAPI\2017\WATER & WASTEWATER NETWORK STD DWGS\20100690.043B.DWG

Watercare

COPYRIGHT – This drawing, the design concept, remain the exclusive property of Harrison Grierson Consultants Limited and may not be used without approval. Copyright reserved.

AIR VENT COWLING, VERTICAL STEEL PIPE FABRICATION DETAIL & CONCRETE FOOTING

SCALE:	1:10 (A4)
ISSUE DATE:	13-07-2018
DWG No.	2010069.043B
REFERENCE No.	WS 15

FAST-TRACK CONSENT

ASSOCIATION OF CONSULTING ENGINEERS NEW ZEALAND

ISO 9001 QUALITY ASSURED

THIS DRAWING AND DESIGN REMAINS THE PROPERTY OF, AND MAY NOT BE REPRODUCED OR ALTERED, WITHOUT THE WRITTEN PERMISSION OF HARRISON GRIERSON CONSULTANTS LIMITED. NO LIABILITY SHALL BE ACCEPTED FOR UNAUTHORISED USE OF THIS DRAWING.

AUCKLAND OFFICE
LEVEL 4, 96 ST GEORGES BAY ROAD
PARNELL AUCKLAND 1052
T +64 9 917 5000
W www.harrisongrierson.com

REF	REVISIONS	BY	DATE
B	FOR FAST-TRACK CONSENT	OLZ	01.02.23
A	FOR FAST-TRACK CONSENT	OLZ	27.01.23

PROJECT:

Metlifecare

99 TOTARA ROAD DEVELOPMENT

TITLE:

WATER STANDARD DETAILS
SHEET 3 OF 4

ORIGINATOR: RZR	DATE: 01.2023	SIGNED:	PLOT BY: OLZ
DRAWN: OLZ	DATE: 01.2023	SIGNED:	PLOT DATE: 02.02.23
CHECKED: RZR	DATE: 27.01.23	SIGNED:	SURVEY BY:
APPROVED: SXS	DATE: 27.01.23	SIGNED:	SURVEY DATE:

ISSUE STATUS: FOR FAST-TRACK CONSENT STAGE 1

PROJECT No: A2213426-00 | SCALES: N.T.S | A1

DRAWING No: A2213426-00-592 | REV B

REFER TO APPROVED MASTER DRAWINGS FOR ORIGINAL SIGNATURES File: DATA\LOCAL\AUTODESK\C3D 2022\ENU\TEMPLATE N:\1050\A2213426.00_A TOTARA ROAD\CAD\CAD - SHEETS\A2213426-00 - 590 - WATER STANDARD DETAILS.DWG

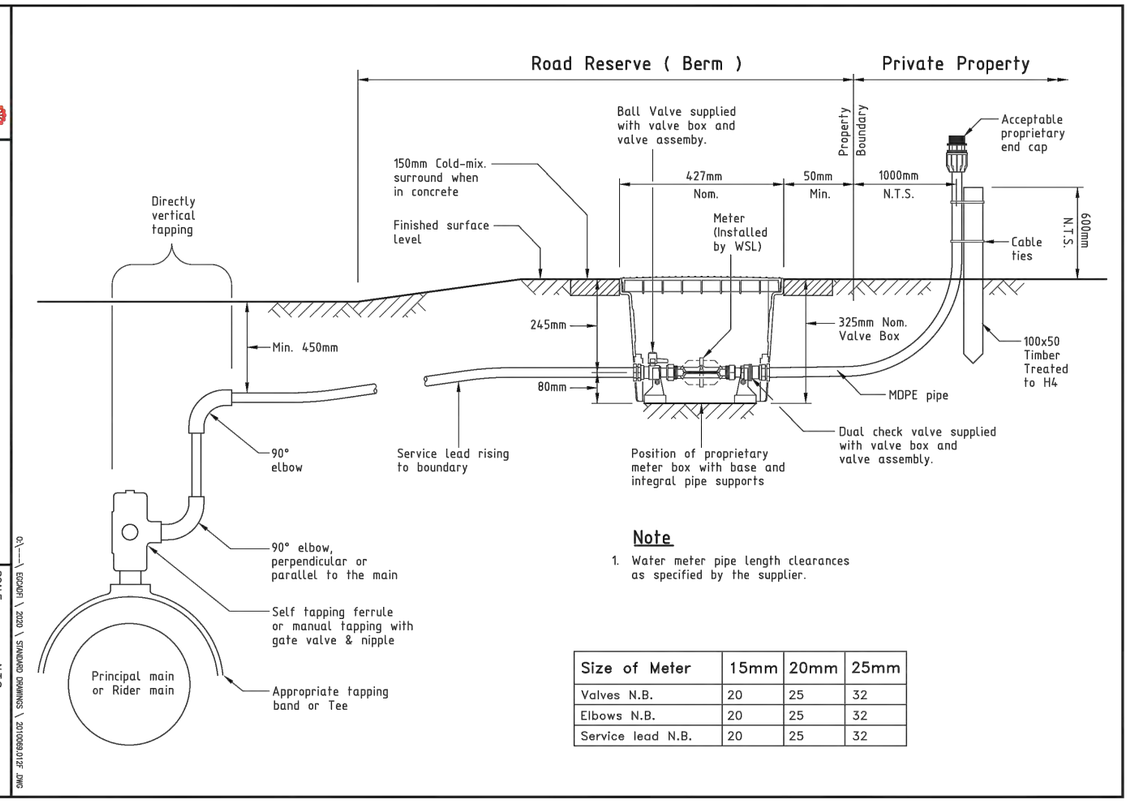

Note

1. Water meter pipe length clearances as specified by the supplier.

Size of Meter	15mm	20mm	25mm
Valves N.B.	20	25	32
Elbows N.B.	20	25	32
Service lead N.B.	20	25	32

Watercare

COPYRIGHT – This drawing, the property of Watercare Services Limited, is subject to Copyright. Reproduction without approval prohibited. Copyright reserved.

DOMESTIC WATER METER CONNECTION
15mm, 20mm & 25mm DIAMETER

SCALE: N.T.S.
ISSUE DATE: 10-08-2020
DWG No. 2010069.012F
REFERENCE No. WS 18

Q:\—— EGCNBT\ 2020 \ STANDARD DRAWINGS \ 2010069.012F .DWG

ASSOCIATION OF CONSULTING ENGINEERS NEW ZEALAND

ISO 9001 QUALITY ASSURED

THIS DRAWING AND DESIGN REMAINS THE PROPERTY OF, AND MAY NOT BE REPRODUCED OR ALTERED, WITHOUT THE WRITTEN PERMISSION OF HARRISON GRIERSON CONSULTANTS LIMITED. NO LIABILITY SHALL BE ACCEPTED FOR UNAUTHORISED USE OF THIS DRAWING.

AUCKLAND OFFICE
LEVEL 4, 96 ST GEORGES BAY ROAD
PARNELL AUCKLAND 1052
T +64 9 917 5000
W www.harrisongrierson.com

REF	REVISIONS	BY	DATE
B	FOR FAST-TRACK CONSENT	OLZ	01.02.23
A	FOR FAST-TRACK CONSENT	OLZ	27.01.23

PROJECT:
Metlifecare
99 TOTARA ROAD DEVELOPMENT

TITLE:
WATER STANDARD DETAILS
SHEET 4 OF 4

ORIGINATOR: RZR	DATE: 01.2023	SIGNED:	PLOT BY: OLZ
DRAWN: OLZ	DATE: 01.2023	SIGNED:	PLOT DATE: 02.02.23
CHECKED: RZR	DATE: 27.01.23	SIGNED:	SURVEY BY:
APPROVED: SXS	DATE: 27.01.23	SIGNED:	SURVEY DATE:

ISSUE STATUS: FOR FAST-TRACK CONSENT STAGE 1

PROJECT No: A2213426-00
SCALES: N.T.S
A1

DRAWING No: A2213426-00-593
REV B

FAST-TRACK CONSENT

Appendix C

SUPPORTING CALCULATIONS

SEDIMENT POND DESIGN
Based on ARC Technical Publication No. 90
"Erosion and Sediment Control Guidelines for Land Disturbing Activities"

PREPARED BY HARRISON GRIERSON CONSULTANTS LIMITED

PROJECT No : A2213426-00-240 BY : KMS DATE : 26-Jan-23 CHECKED : SXS

SITE DESCRIPTION : 99 Totara Road, Whenuapai
POND DESCRIPTION: SRP1
CONTRIBUTING CATCHMENT : 2.6348 ha
WORKING AREA : 2.6348 ha
AVERAGE SITE SLOPE : 3 %
SITE LENGTH : 190 m

Minimum Sediment Pond Size

The size of the pond, in m³, is 2 % of the total contributing catchment, in m².

Pond volume = 526.96 m³

Proposed Sediment Pond

Length/Width ratio = 3 :1 13
Pond Dimensions =

	Width	Length		Width	Length
@ av depth	13.3	39.8			
@ spillway MH level	16.3	42.8	Crest	19.9	46.4
@ Floor level	10.3	36.8	Floor	10.3	36.8

(This is the height of the dam above the outlet manhole including freeboard and 10%AEP spillway)

Surface Area = 695 m²
Pond Depth = 1 m
Side Slopes = 1vt : 3 hz

Spreaders
Flow Rate l/s 7.9044
Number 2

Pond Volume = 535.96 m³ *Av depth(spillway level * floor level)/2*

Spillway Design

- Design for 10% AEP rainfall

The Peak Flow is calculated using the Rational Method: Q = 2.78CIA

• Runoff coefficient, C

Working Area
C = 0.7

Remaining Area
C = 0.7

Cave = 0.7

• Rainfall Intensity, I 18

Manning's, n = 0.03
tc = 13.6 minutes *(From "A Guideline and Procedure for Hydrological Design of Urban Stormwater Systems")*

Calculate I from Rainfall intensity from 10% AEP from TP108
I = 140 mm/hr

10% AEP flow = 0.72 *m³/s*

Spillway Detail

Use Q = CLH3/2 to calculate the spillway height (H)

Spillway width, L = 2.73 m
Free board = 0.3 m
C = 1.6 *(Assume broad crested weir)*

Spillway Height = 0.60 m *(This is the height of the flow above the outlet manhole including freeboard)*

Wastewater & Water Supply Demand Calculations

Project Name:	99 Totara Road
Project NO:	A2213426.00
Revision :	B
Date:	2/2/2023
By:	RZR
Checked By:	SXS

Wastewater

Design Criteria - Refer WSL CoP Section 5.3.5

Residential:

ADWF =	180	l/p/d
PDWF =	3	Peaking factor - self cleansing
PWWF	6.7	Peaking factor - peak design flow
Design Population =	3.0	People per dwelling

Hospital (Day facility)

ADWF =	280	l/bed/d
PDWF =	2	Peaking factor - self cleansing
PWWF	5.0	Peaking factor - peak design flow

Hospital (Staff)

ADWF =	45	l/p/d
PDWF =	2	Peaking factor - self cleansing
PWWF	5.0	Peaking factor - peak design flow

Pre-Development Flows

	Subcatchment Details	Occupancy (People)			Peak Flow		
		Households	EP	Total EP	ADWF (L/s)	PDWF (L/s)	PWWF (L/s)
Residential	Residential	1	3	3	0.006	0.019	0.042
TOTAL		1	3	3	0.006	0.019	0.042

Post-Development Flows

	Subcatchment Details	Occupancy (People)				Peak Flow	
		Households	EP	Total EP	ADWF (L/s)	PDWF (L/s)	PWWF (L/s)
Detached Villa 130m2	Residential	5	2	10	0.021	0.063	0.140
Detached Villa 150m2	Residential	10	2	20	0.042	0.125	0.279
Double Villa	Residential	38	2	76	0.158	0.475	1.061
Triple Villa	Residential	33	2	66	0.138	0.413	0.921
Villa Terrace A	Residential	8	2	16	0.033	0.100	0.223
Villa Terrace B	Residential	16	2	32	0.067	0.200	0.447
Amenity Building	Residential	60	1	60	0.125	0.375	0.838
Hospital (Day facility)	Hospital (Day facility)	50	1	50	0.162	0.324	0.810
TOTAL		205	10	300	0.683	1.887	4.300
Net Difference Pre / Post-development		204		297	0.677	1.868	4.258

Water Supply

Design Criteria - Refer WSL CoP Section 6.3.5

Daily Consumption =	220	l/p/d (residential)	50	l/p/d (hospital staff)	320	l/bed/d (hospital day facility)
Peak daily demand	2					
Peak hourly demand	2.5					

Pre-Development Demand

	Subcatchment Details	Residential			Peak Flow
		Households	EP	Total EP	PADC (L/s)
Residential	Residential	1	3	3	0.038
TOTAL		1	3.0	3	0.038

Post-Development Demand

	Subcatchment Details	Residential			Peak Flow
		Households	EP	Total EP	PADC (L/s)
Detached Villa 130m2	Residential	5	2	10	0.127
Detached Villa 150m2	Residential	10	2	20	0.255
Double Villa	Residential	38	2	76	0.968
Triple Villa	Residential	33	2	66	0.840
Villa Terrace A	Residential	8	2	16	0.204
Villa Terrace B	Residential	16	2	32	0.407
Amenity Building	Residential	60	1	60	0.764
Hospital (Day facility)	Hospital (Day facility)	50	1	50	0.926
TOTAL		205	10	300	4.109
Net Difference Pre / Post-development		204		297	4.071

Appendix D

B4U DIG PLANS

Watercare
An Auckland Council Organisation

Sequence No: 11016866
Job No: 2152790
Location: Totara Rd

before u dig .co.nz

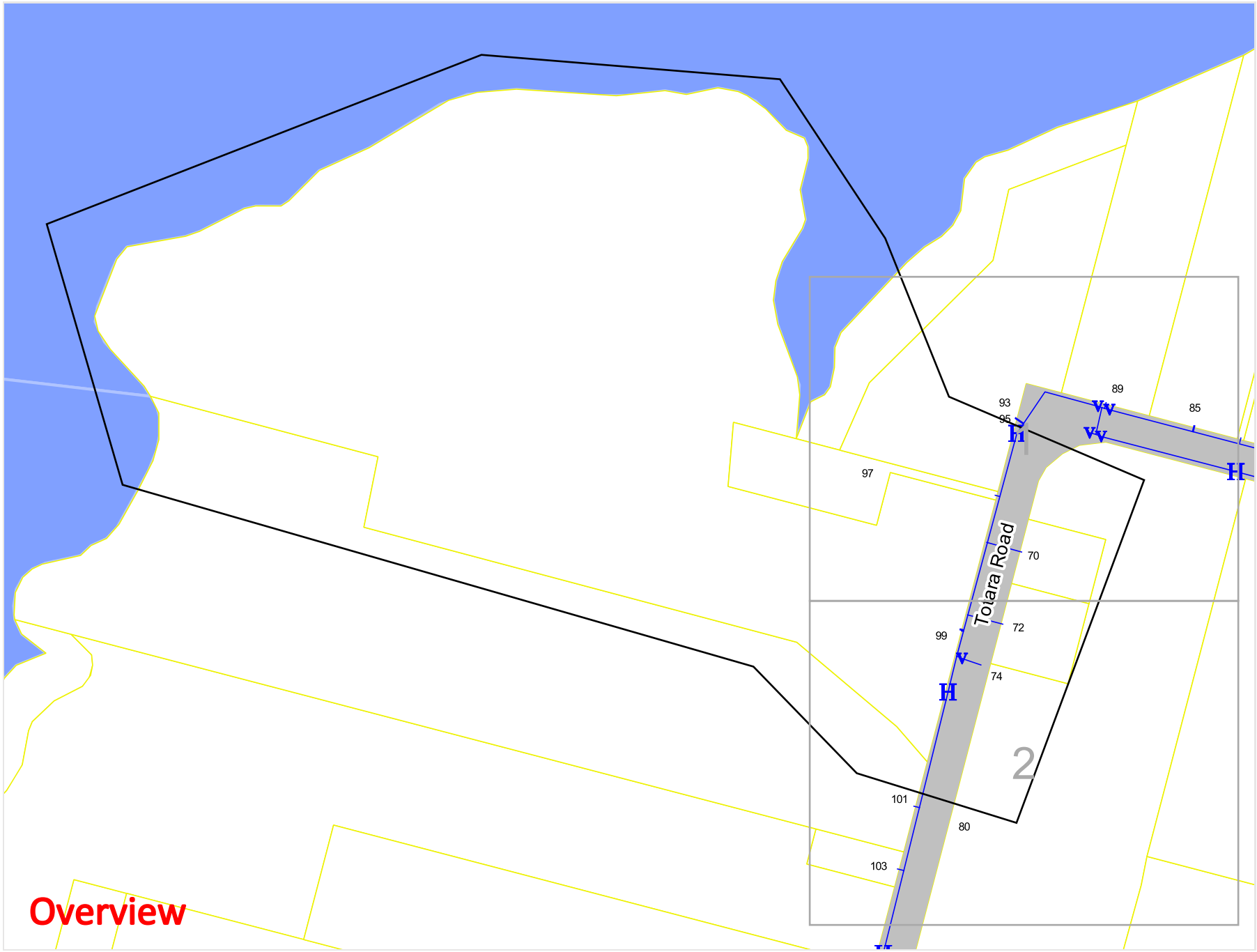

Legend

- Waste Water
- Water
- Electrical/Cathodic Protection
- Waste Water Proposed
- Water Proposed

V Valve
H Hydrant
M Water Meter
Manhole

Watercare Services Ltd accepts no responsibility for incomplete or inaccurate information contained on this map. Use of this data is subject to, and constitutes acceptance of the conditions set out in our disclaimer. Topographic information is derived from Land Information New Zealand, CROWN COPYRIGHT RESERVED.

N

Scale: 1:2915
Expires: 23 Feb 2023

DISCLAIMER: While reasonable measures have been taken to ensure the accuracy of the information contained in this plan response, neither Watercare nor PelicanCorp shall have any liability whatsoever in relation to any loss, damage, cost or expense arising from the use of this plan response or the information contained in it or the completeness or accuracy of such information. Use of such information is subject to and constitutes acceptance of these terms.

Watercare
An Auckland Council Organisation

Sequence No: 11016866
Job No: 2152790
Location: Totara Rd

before u dig .co.nz

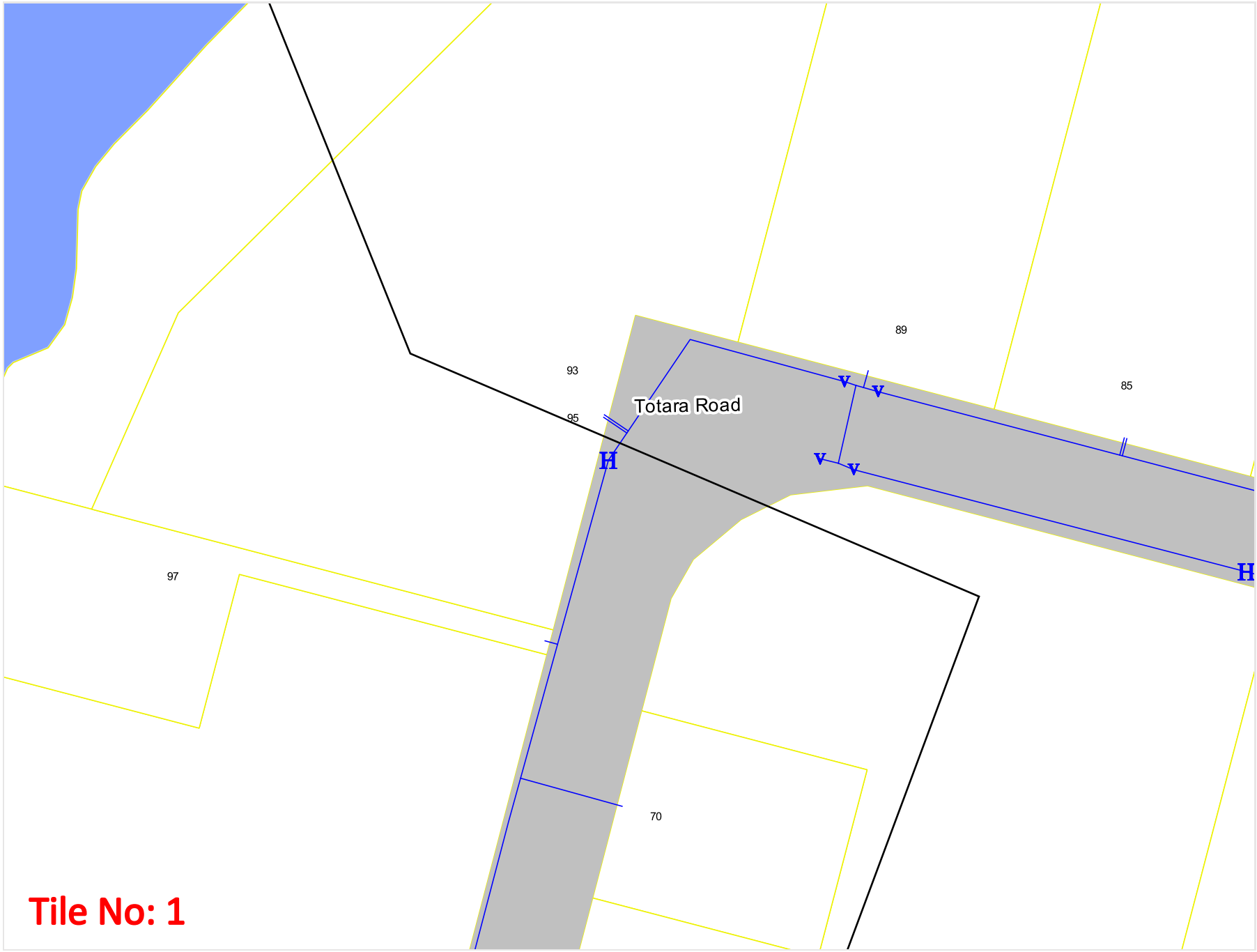

Legend

- Waste Water
- Water
- Electrical/Cathodic Protection
- Waste Water Proposed
- Water Proposed

V Valve
H Hydrant
M Water Meter
Manhole

Watercare Services Ltd accepts no responsibility for incomplete or inaccurate information contained on this map. Use of this data is subject to, and constitutes acceptance of the conditions set out in our disclaimer. Topographic information is derived from Land Information New Zealand, CROWN COPYRIGHT RESERVED.

N

Scale: 1:1000
Expires: 23 Feb 2023

DISCLAIMER: While reasonable measures have been taken to ensure the accuracy of the information contained in this plan response, neither Watercare nor PelicanCorp shall have any liability whatsoever in relation to any loss, damage, cost or expense arising from the use of this plan response or the information contained in it or the completeness or accuracy of such information. Use of such information is subject to and constitutes acceptance of these terms.

Watercare
An Auckland Council Organisation

Sequence No: 11016866
Job No: 2152790
Location: Totara Rd

before u dig .co.nz

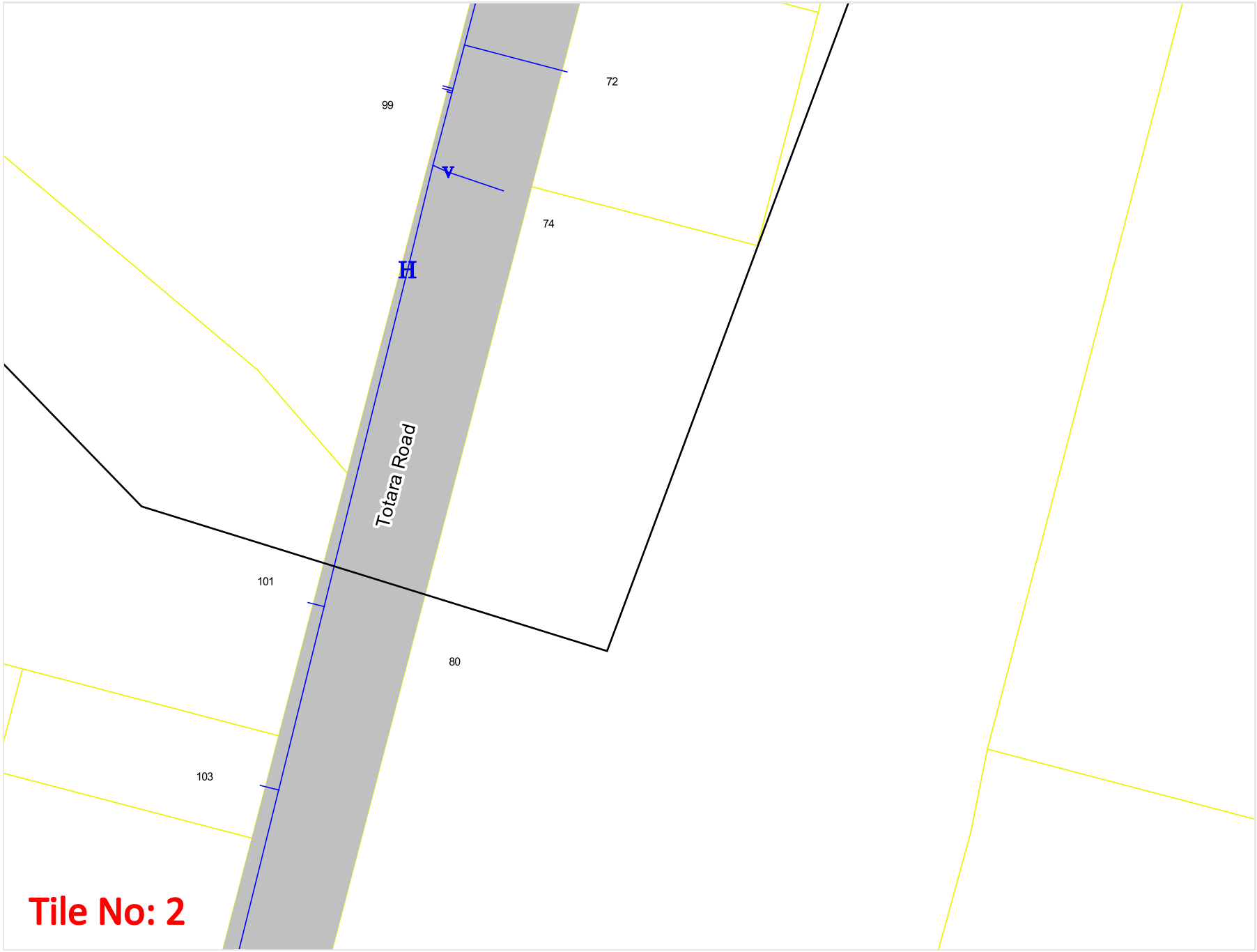

Legend

- Waste Water
- Water
- Electrical/Cathodic Protection
- Waste Water Proposed
- Water Proposed

V Valve
H Hydrant
M Water Meter
Manhole

Watercare Services Ltd accepts no responsibility for incomplete or inaccurate information contained on this map. Use of this data is subject to, and constitutes acceptance of the conditions set out in our disclaimer. Topographic information is derived from Land Information New Zealand, CROWN COPYRIGHT RESERVED.

N

Scale: 1:1000
Expires: 23 Feb 2023

DISCLAIMER: While reasonable measures have been taken to ensure the accuracy of the information contained in this plan response, neither Watercare nor PelicanCorp shall have any liability whatsoever in relation to any loss, damage, cost or expense arising from the use of this plan response or the information contained in it or the completeness or accuracy of such information. Use of such information is subject to and constitutes acceptance of these terms.

CHORUS

WARNING: Buried services are widespread and it should be assumed that they are present until it is proven otherwise.
Cables should be expected to be found at ANY depth.
In most instances Chorus plans do NOT show house service feeds on private property.
Refer to cover letter provided with your request for additional information - use all plans provided in conjunction with each other
You are responsible for interpreting the information provided and should refer to Worksafe.govt.nz for the 'Guide for safety with underground services'
For assistance contact Chorus Network Protection on 0800 822 003 or if you suspect damage has occurred contact 0800 463 896 opt 2

N

Plan Name	ZC33
Plan ID	89072
Version	GH
Current at	26/01/2023

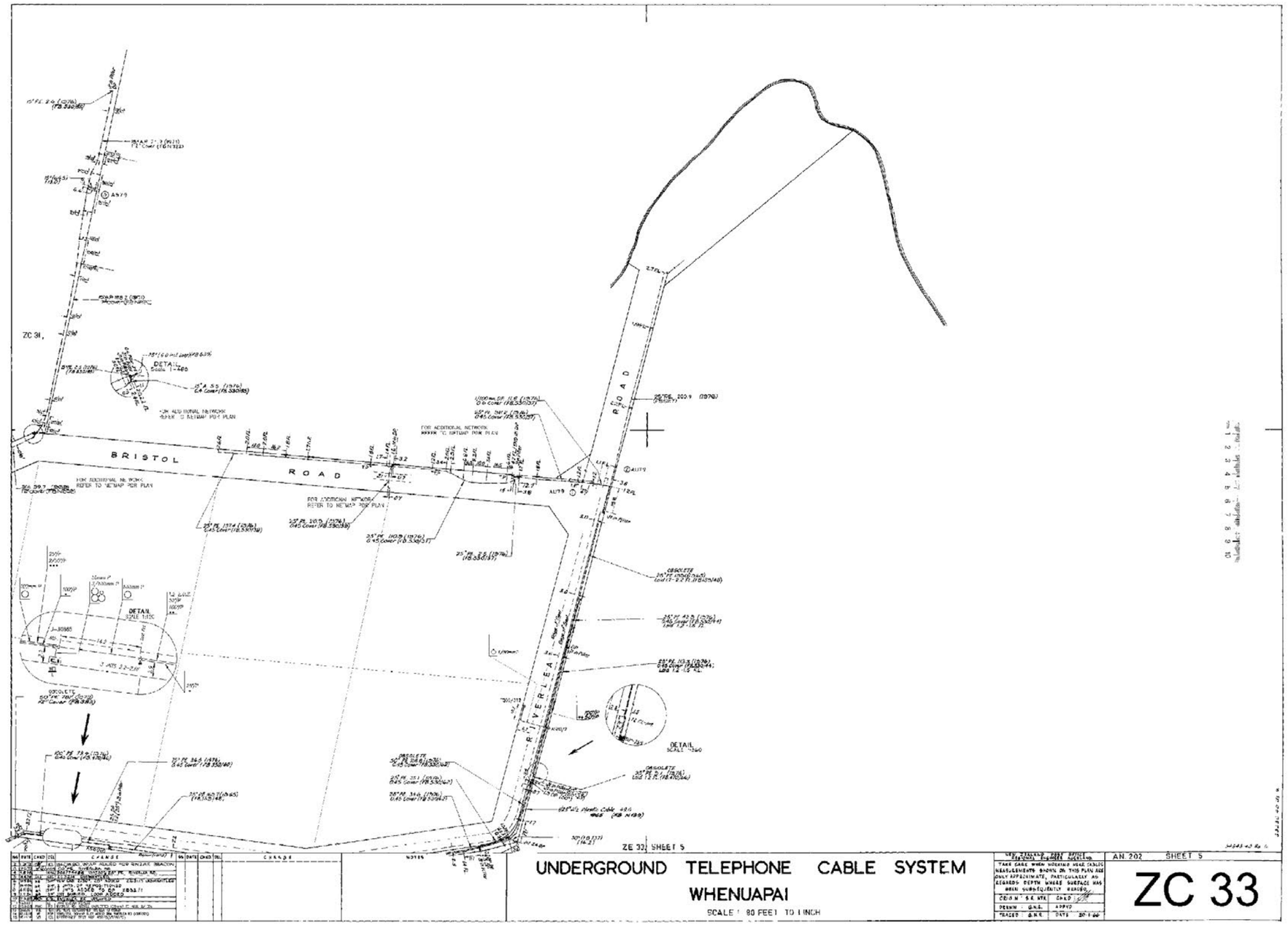

ZC 33

CHORUS

WARNING: Buried services are widespread and it should be assumed that they are present until it is proven otherwise.
Cables should be expected to be found at ANY depth. In most instances Chorus plans do NOT show house service feeds on private property.
Refer to cover letter provided with your request for additional information - use all plans provided in conjunction with each other
You are responsible for interpreting the information provided and should refer to Worksafe.govt.nz for the 'Guide for safety with underground services'
For assistance contact Chorus Network Protection on 0800 822 003 or if you suspect damage has occurred contact 0800 463 896 opt 2

N

Plan Name	BB79
Plan ID	94863
Version	GD
Current at	26/01/2023

BB79 R10
W WEI

'der Filemaster "D"
SELF-ADHESIVE PLAN HANGER
mber 137841

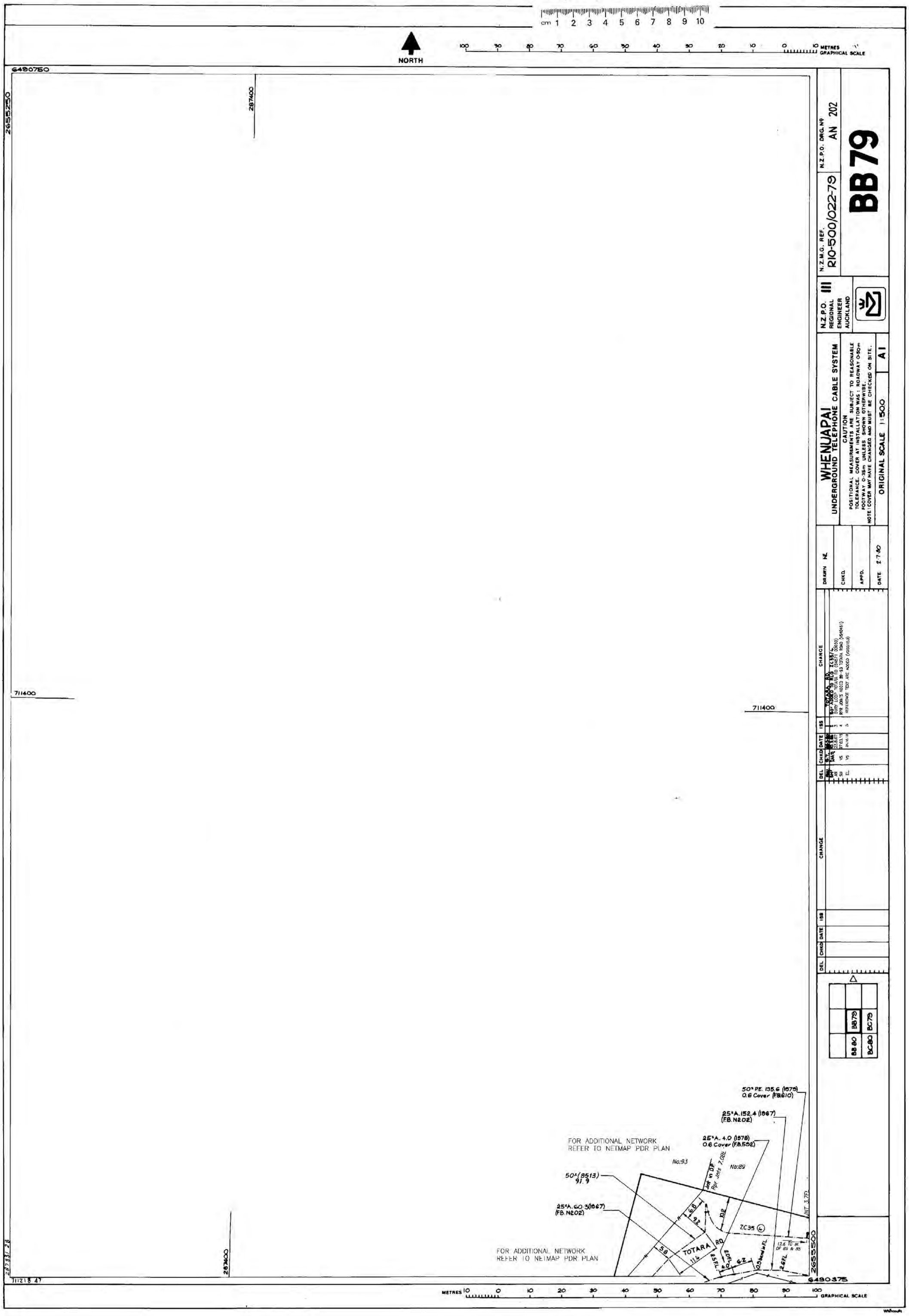

CHORUS

WARNING: Buried services are widespread and it should be assumed that they are present until it is proven otherwise.
Cables should be expected to be found at ANY depth. In most instances Chorus plans do NOT show house service feeds on private property.
Refer to cover letter provided with your request for additional information - use all plans provided in conjunction with each other
You are responsible for interpreting the information provided and should refer to Worksafe.govt.nz for the 'Guide for safety with underground services'
For assistance contact Chorus Network Protection on 0800 822 003 or if you suspect damage has occurred contact 0800 463 896 opt 2

N

Plan Name	BC80
Plan ID	95179
Version	GH
Current at	26/01/2023

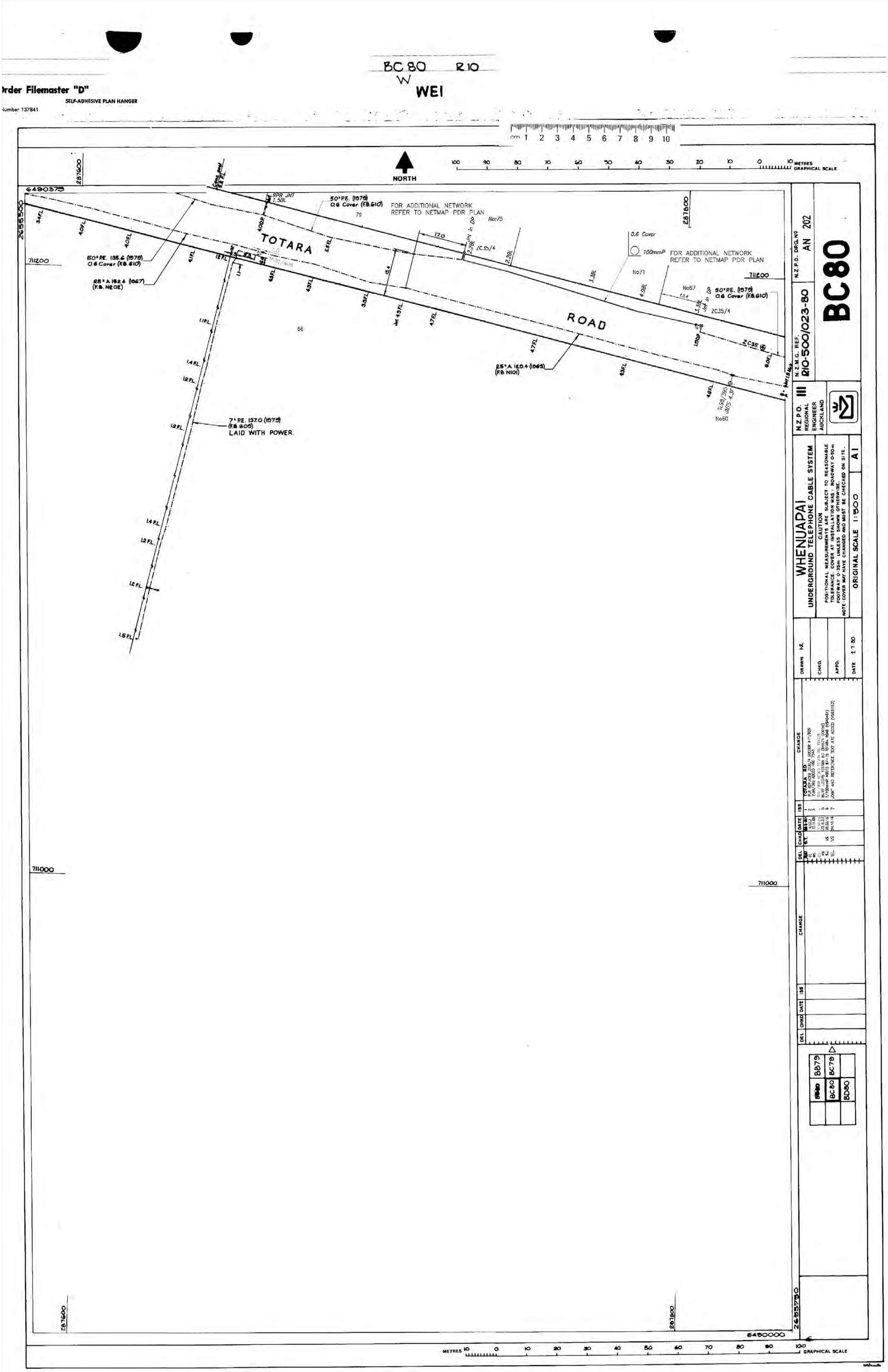

CHORUS

WARNING: Buried services are widespread and it should be assumed that they are present until it is proven otherwise.
Cables should be expected to be found at ANY depth. In most instances Chorus plans do NOT show house service feeds on private property.
Refer to cover letter provided with your request for additional information - use all plans provided in conjunction with each other
You are responsible for interpreting the information provided and should refer to Worksafe.govt.nz for the 'Guide for safety with underground services'
For assistance contact Chorus Network Protection on 0800 822 003 or if you suspect damage has occurred contact 0800 463 896 opt 2

N

Plan Name	BB80
Plan ID	95315
Version	GE
Current at	26/01/2023

BB80 R10
W. WEI

der Filemaster "D"
SELF-ADHESIVE PLAN HANGER
nber 137841

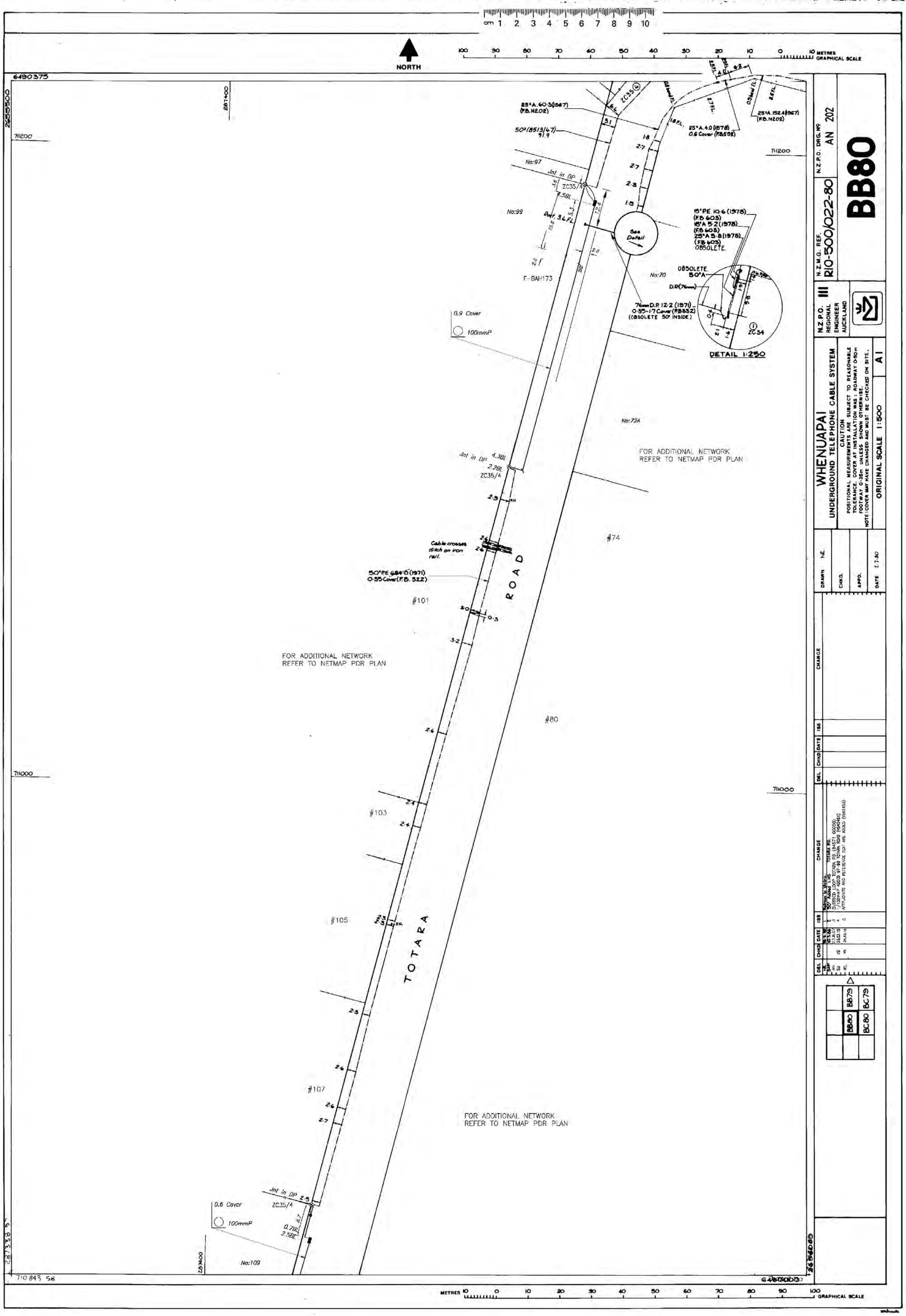

N.Z.P.O. REGIONAL ENGINEER AUCKLAND

N.Z.M.G. REF. R10-500/022-80

N.Z.P.O. DRG. No AN 202

BB80

WHENUAPAI
UNDERGROUND TELEPHONE CABLE SYSTEM

CAUTION
POSITIONAL MEASUREMENTS ARE SUBJECT TO REASONABLE TOLERANCE. COVER AT INSTALLATION WAS : ROADWAY 0·50m FOOTWAY 0·35m UNLESS SHOWN OTHERWISE.
NOTE: COVER MAY HAVE CHANGED AND MUST BE CHECKED ON SITE.

ORIGINAL SCALE 1:500 A1

DRAWN N.Z.
CHKD.
APPD.
DATE 7.7.80

DEL	CHKD	DATE	ISS	CHANGE
3.4.8		10.5.86	2	50* Added LHS TOTARA RD.
AN		23.8.07	3	EUDRED LOOP TOTARA RD (84571 00050)
SU	VS	25.03.15	4	1/100mm P ADDED 97-99 TOTARA ROAD (9540461)
HEL	VS	24.10.16	5	APPURTENTS AND REFERENCE TEXT ARE ADDED (9363153)

	BB79	BC79
	BB80	BC80

CHORUS

WARNING: Buried services are widespread and it should be assumed that they are present until it is proven otherwise.
Cables should be expected to be found at ANY depth. In most instances Chorus plans do NOT show house service feeds on private property.
Refer to cover letter provided with your request for additional information - use all plans provided in conjunction with each other
You are responsible for interpreting the information provided and should refer to Worksafe.govt.nz for the 'Guide for safety with underground services'
For assistance contact Chorus Network Protection on 0800 822 003 or if you suspect damage has occurred contact 0800 463 896 opt 2

N

Plan Name	AS77
Plan ID	100320
Version	GE
Current at	26/01/2023

DEL	CHKD	DATE	ISS	CHANGE
P.B.V.	S.T.	12.7.88	1	
RCJ		30.2.01	2	ADDED RLG BA76/1 TO NEW LOTS
AL		14.2.01	3	GEOMAP H11/281
PM		7.3.12	4	NEW CT LOT 25 ADDED FOR SUBDIVISION OFF JAMES PAIGE VS2296

DRAWN : P.B.V.
CHKD : S.T.
APPD : J.P.
DATE : 12.7.88

KUMEU
UNDERGROUND TELEPHONE CABLE SYSTEM

CAUTION
POSITIONAL MEASUREMENTS ARE SUBJECT TO REASONABLE TOLERANCE. COVER AT INSTALLATION WAS: ROADWAY 0.50m FOOTWAY 0.35m. UNLESS SHOWN OTHERWISE NOTE: COVER MAY HAVE CHANGED AND MUST BE CHECKED ON SITE.

ORIGINAL SCALE 1 : 2000 A1

TELECOM CORPORATION OF NEW ZEALAND LTD.
AREA MANAGER AUCKLAND WEST

TCNZ DRG No: AV 2
NZMG REF: R10-2000/05.20
TCNZ SHT No: AS77

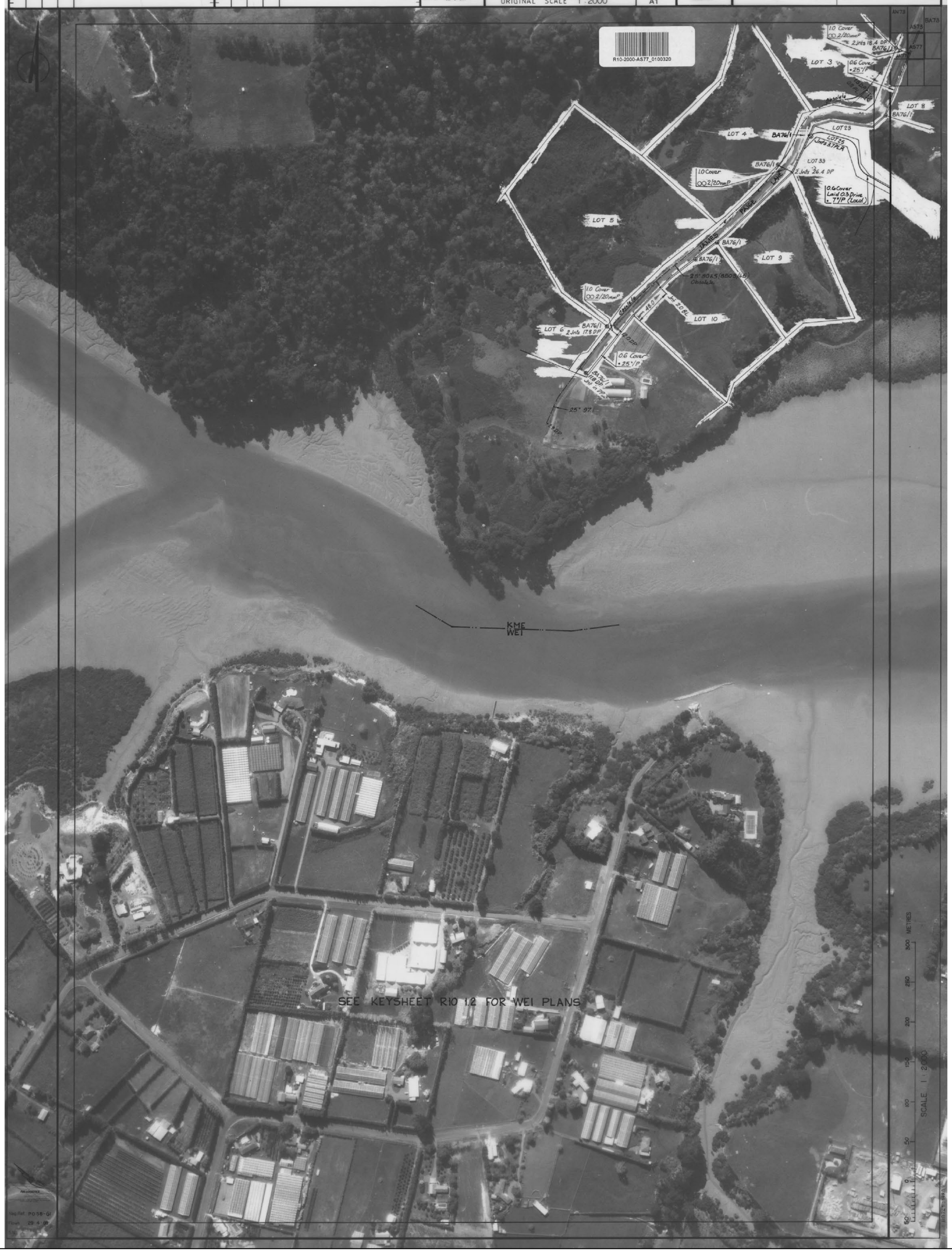

CHORUS

WARNING: Buried services are widespread and it should be assumed that they are present until it is proven otherwise.
Cables should be expected to be found at ANY depth. In most instances Chorus plans do NOT show house service feeds on private property.
Refer to cover letter provided with your request for additional information - use all plans provided in conjunction with each other
You are responsible for interpreting the information provided and should refer to Worksafe.govt.nz for the 'Guide for safety with underground services'
For assistance contact Chorus Network Protection on 0800 822 003 or if you suspect damage has occurred contact 0800 463 896 opt 2

N

Plan Name	BA77
Plan ID	284129
Version	AF
Current at	26/01/2023

DEL	CHKD	DATE	ISS	CHANGE
DCL		03.09.02	1	NEW SHEET DRAWN
SRG		01.03.12	2	TM35/484 & 7x/P ADDED 25 JAMES PAIGE LANE (VS20961)

DEL	CHKD	DATE	ISS	CHANGE

DRAWN:
CHKD:
APPD:
DATE:

KUMEU

UNDERGROUND TELEPHONE CABLE SYSTEM

CAUTION
POSITIONAL MEASUREMENTS ARE SUBJECT TO REASONABLE TOLERANCE. COVER AT INSTALLATION WAS : ROADWAY 0.50m FOOTWAY O.35m. UNLESS SHOWN OTHERWISE NOTE: COVER MAY HAVE CHANGED AND MUST BE CHECKED ON SITE.

ORIGINAL SCALE: 1:2000

TELECOM CORPORATION OF NEW ZEALAND LTD.

NZMG REF: R10.2000/

TCNZ DRG. No. AN 202

TCNZ SHT. No. BA77

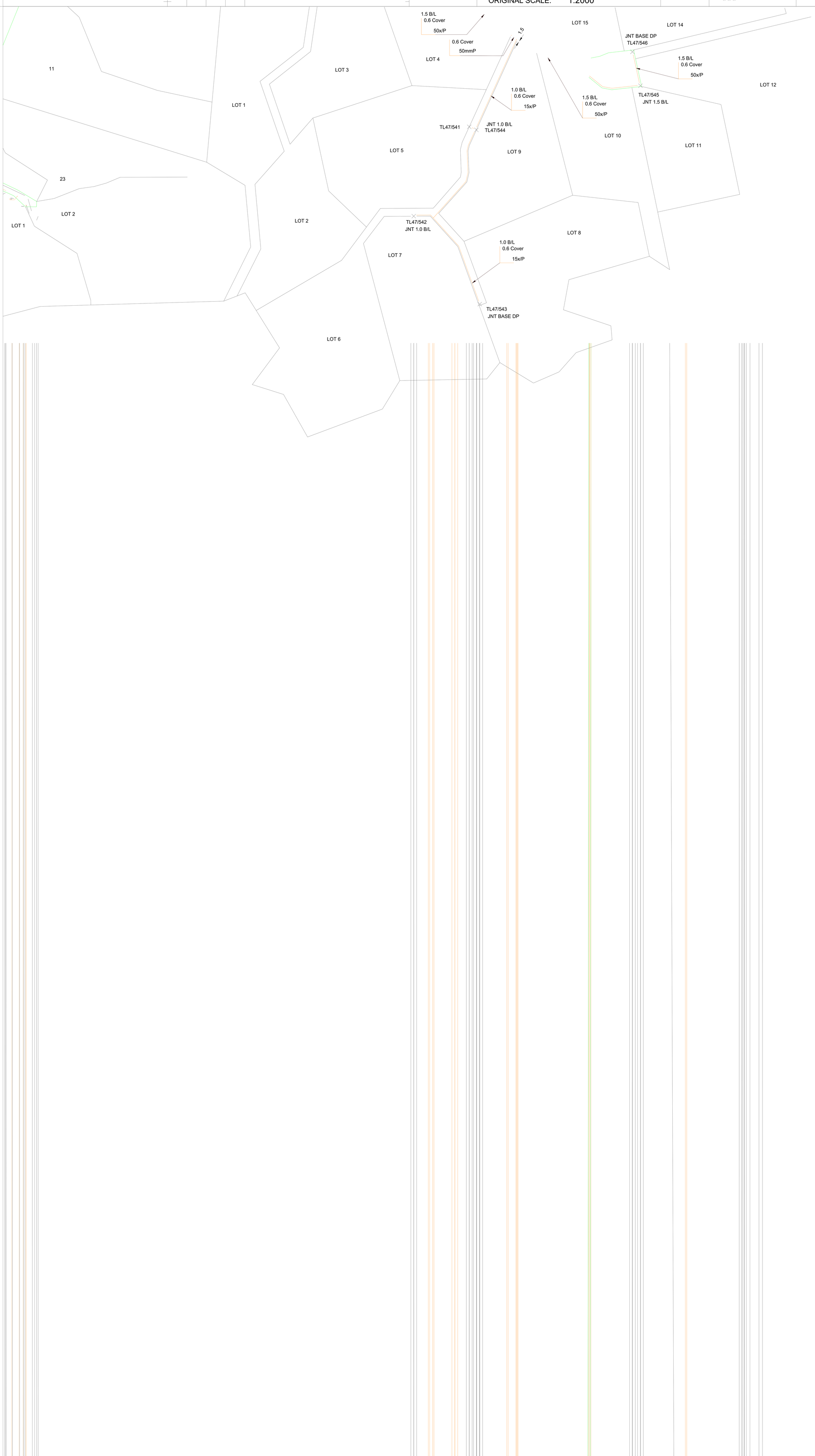

CHORUS

WARNING: Buried services are widespread and it should be assumed that they are present until it is proven otherwise.
Cables should be expected to be found at ANY depth. In most instances Chorus plans do NOT show house service feeds on private property.
Refer to cover letter provided with your request for additional information - use all plans provided in conjunction with each other
You are responsible for interpreting the information provided and should refer to Worksafe.govt.nz for the 'Guide for safety with underground services'
For assistance contact Chorus Network Protection on 0800 822 003 or if you suspect damage has occurred contact 0800 463 896 opt 2

N

Plan Name	AS77
Plan ID	551632
Version	GD
Current at	26/01/2023

UNPLOTTED PLANT AS77 R10 R10-2000/05.20 WHENUAPAI AS77 R10

Re-Order Filemaster "D"
SELF-ADHESIVE PLAN HANGER
Patent Number 137841

AN 77	AS 77	BA 77
AN 01	AS 01	BA 01

WHENUAPAI
UNDERGROUND TELEPHONE CABLE SYSTEM
WHENUAPAI

OCD DIFFERENCE | BASE DATA ORIGIN | APPD
ORIGINAL SCALE 1:2000

Telecom Corporation of New Zealand Limited
DISTRICT MANAGER

AS 77
NZMG REF : R10-2000/05.20

DISTRICT	SOURCE	NUMBER	SIZE
AN	TCNZ	1161	A1

© Copyright Reserved Telecom
UD226-1987

CHORUS

WARNING: Buried services are widespread and it should be assumed that they are present until it is proven otherwise.
Cables should be expected to be found at ANY depth.
In most instances Chorus plans do NOT show house service feeds on private property.
Refer to cover letter provided with your request for additional information - use all plans provided in conjunction with each other
You are responsible for interpreting the information provided and should refer to Worksafe.govt.nz for the 'Guide for safety with underground services'
For assistance contact Chorus Network Protection on 0800 822 003 or if you suspect damage has occurred contact 0800 463 896 opt 2

N

Plan Name	Gold
Plan ID	
Version	
Current at	26/01/2023

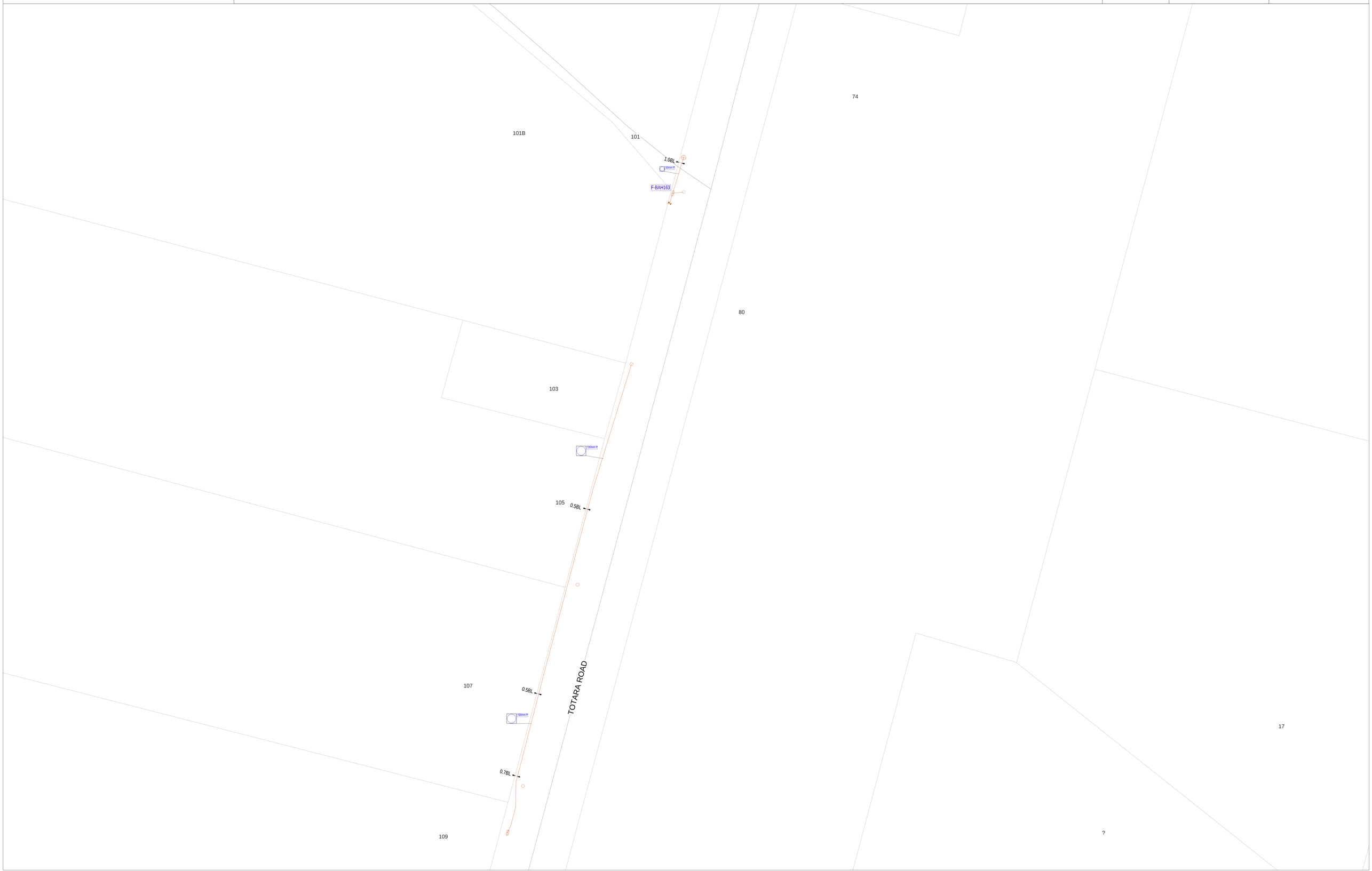

CHORUS

WARNING: Buried services are widespread and it should be assumed that they are present until it is proven otherwise.
Cables should be expected to be found at ANY depth.
In most instances Chorus plans do NOT show house service feeds on private property.
Refer to cover letter provided with your request for additional information - use all plans provided in conjunction with each other
You are responsible for interpreting the information provided and should refer to Worksafe.govt.nz for the 'Guide for safety with underground services'
For assistance contact Chorus Network Protection on 0800 822 003 or if you suspect damage has occurred contact 0800 463 896 opt 2

N

Plan Name	Gold
Plan ID	
Version	
Current at	26/01/2023